GEBERIT GIS

GEBERIT

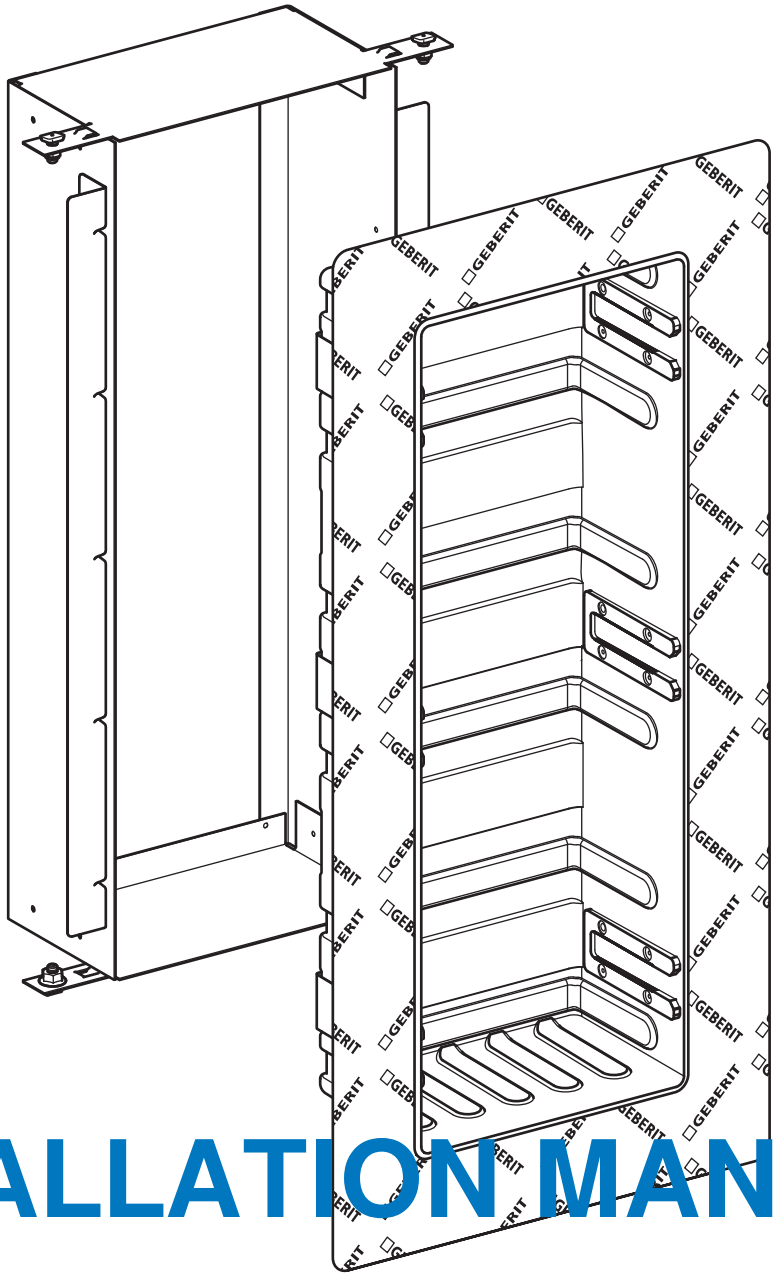

INSTALLATION MANUAL

MONTAGEANLEITUNG
INSTRUCTIONS DE MONTAGE
ISTRUZIONI PER IL MONTAGGIO

KNOW HOW INSTALLED

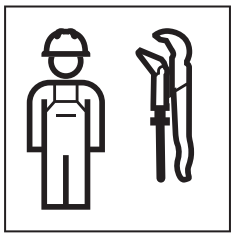

968.757.00.0(02)

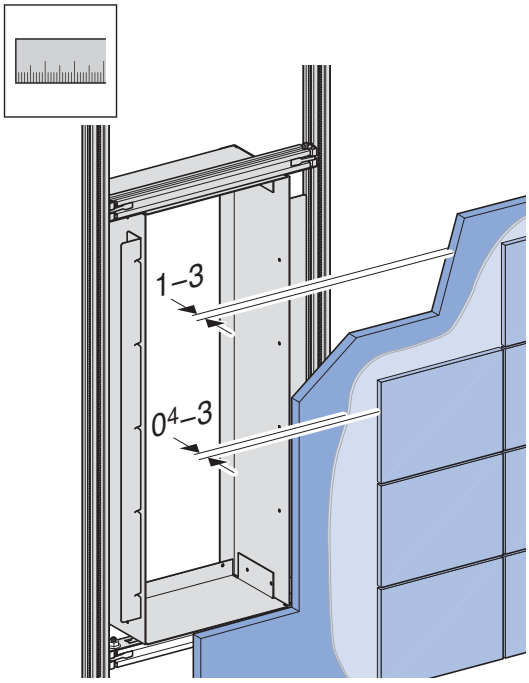

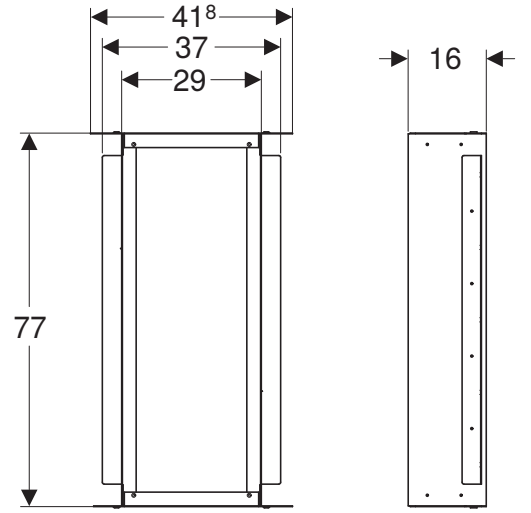

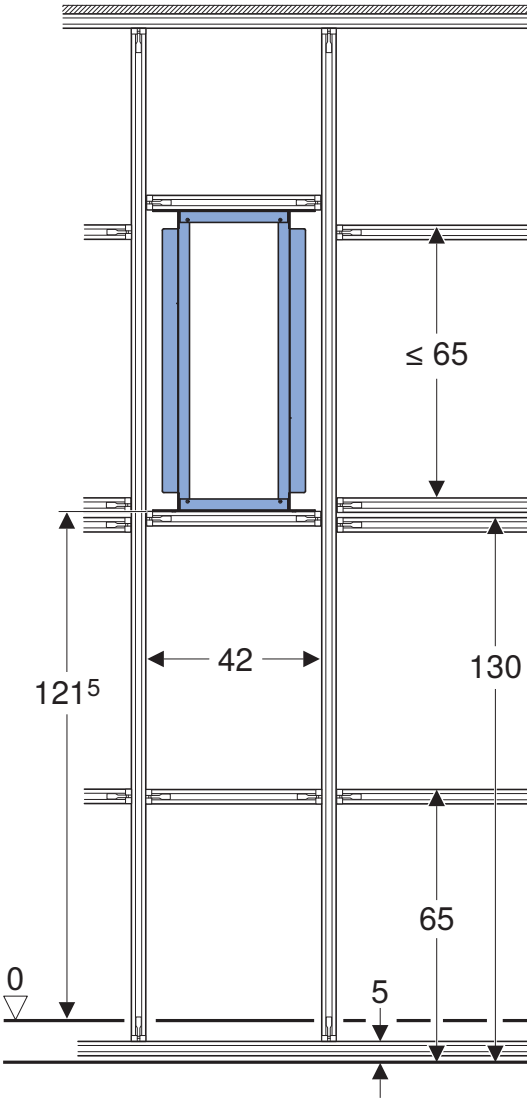

27021602668807691 © 10-2025
968.757.00.0(02)

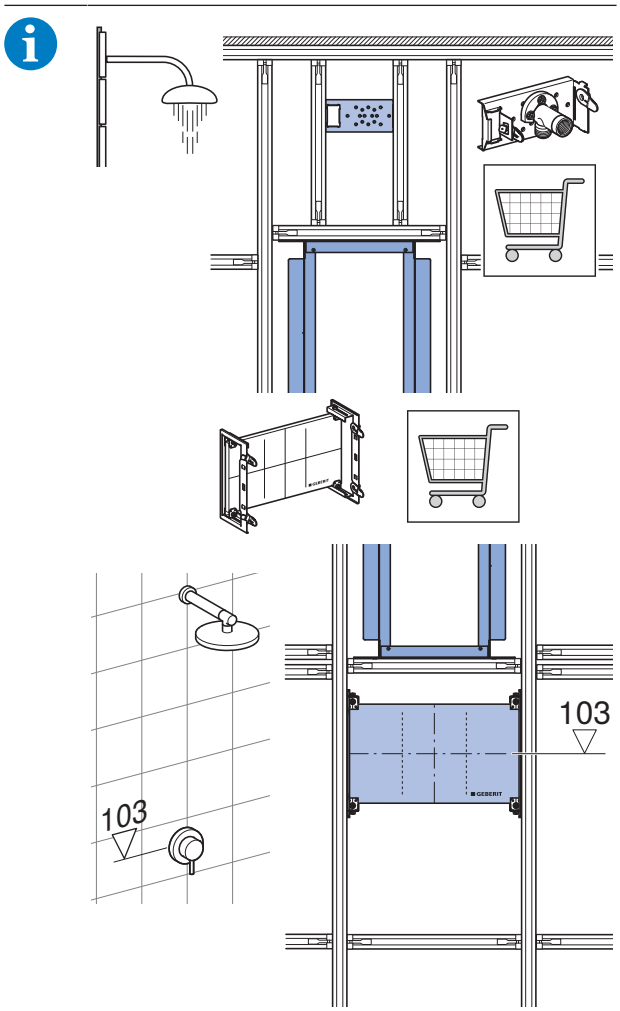
103
103

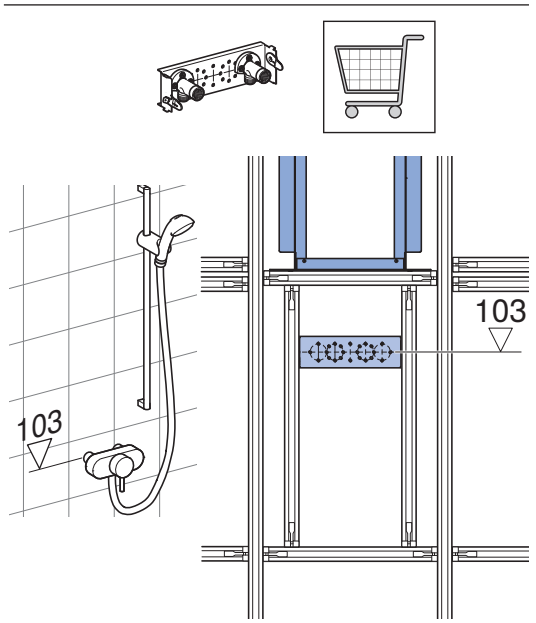
103
103

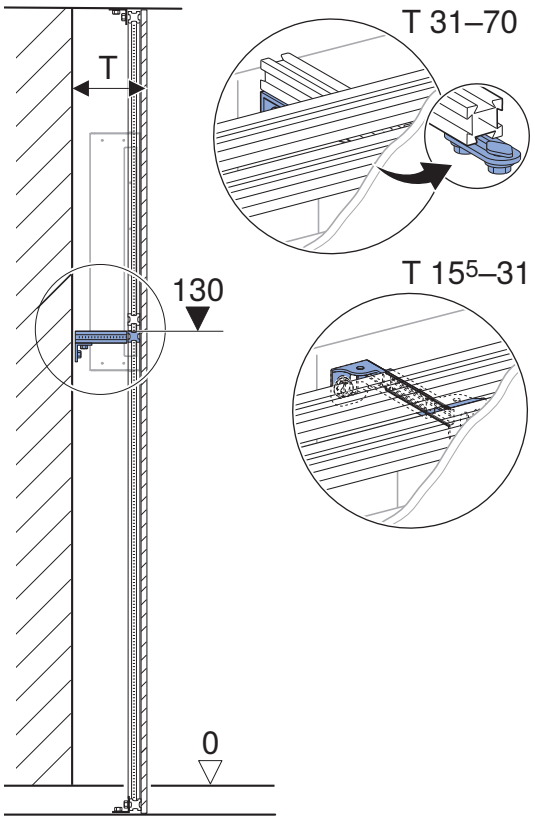

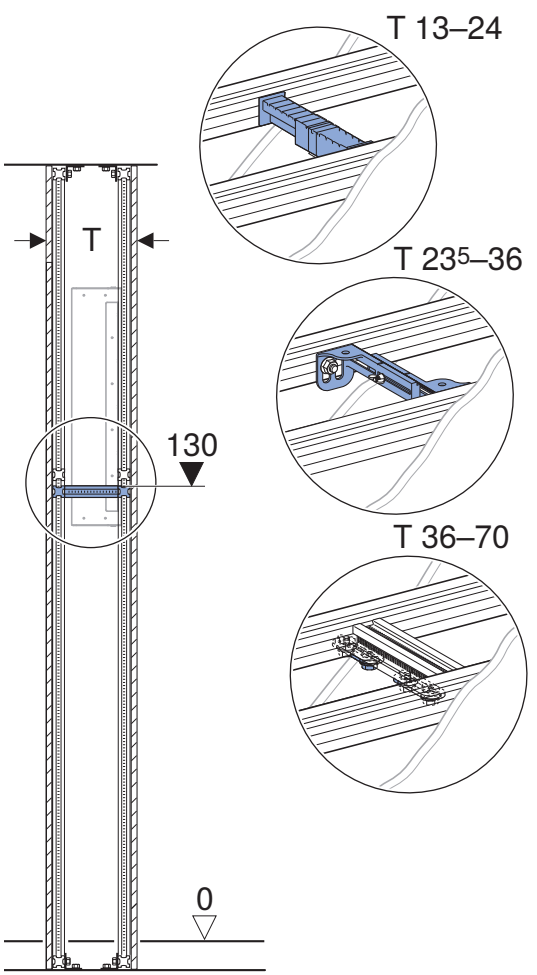

27021602668807691 © 10-2025
968.757.00.0(02)

1

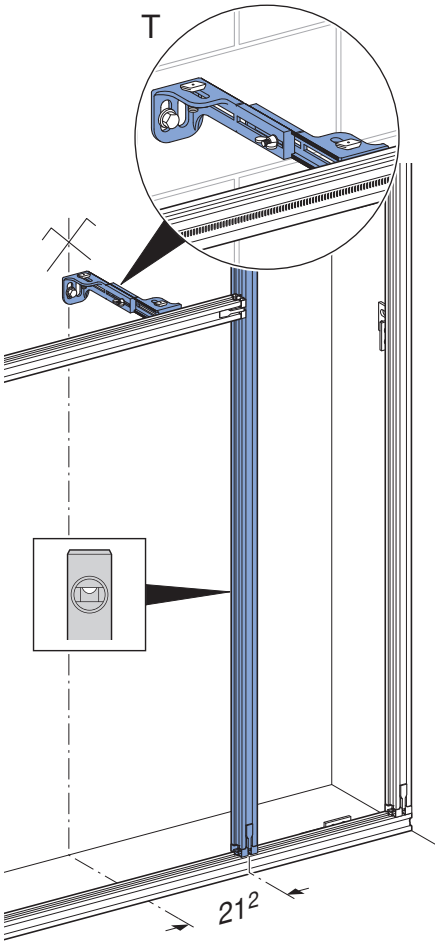

2

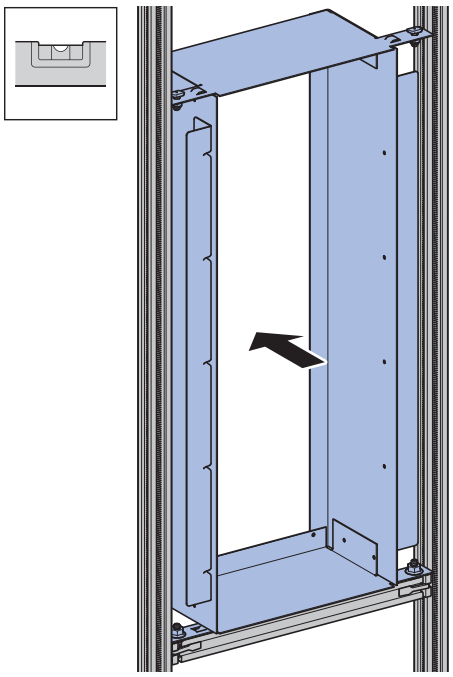

3

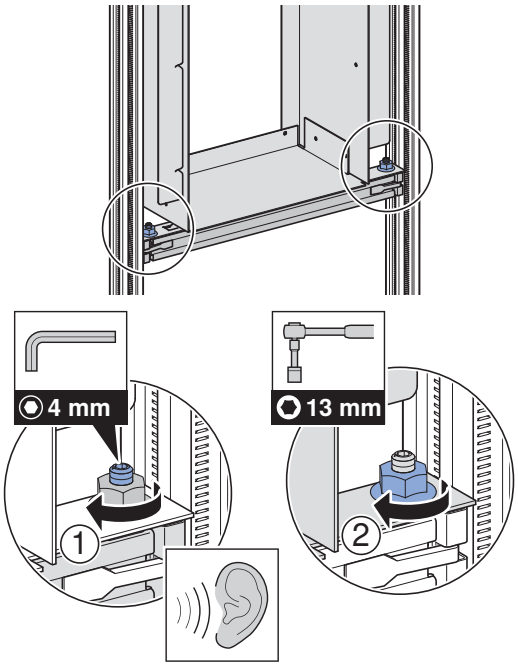

4

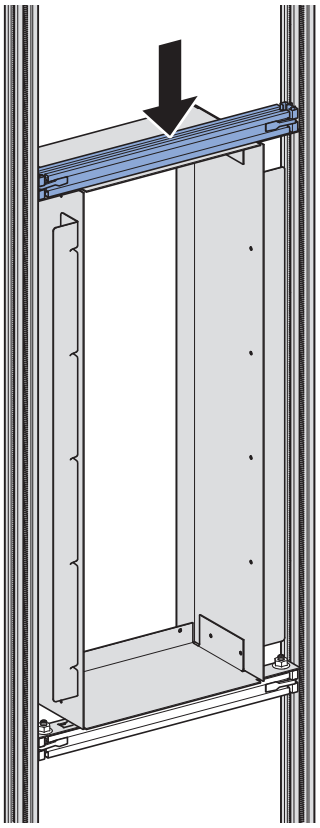

5

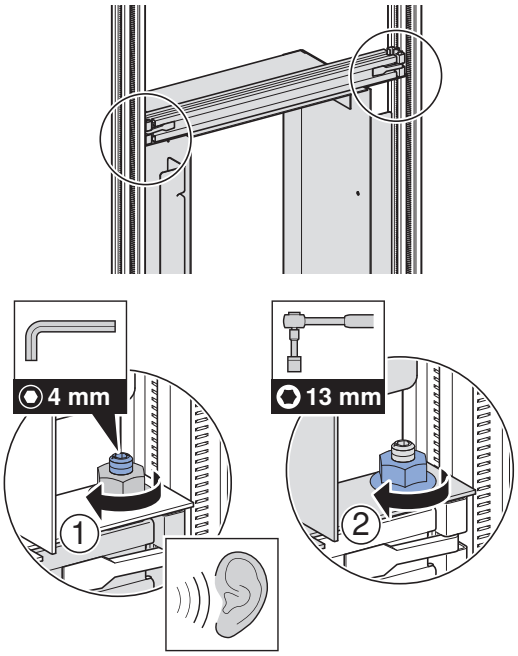

6

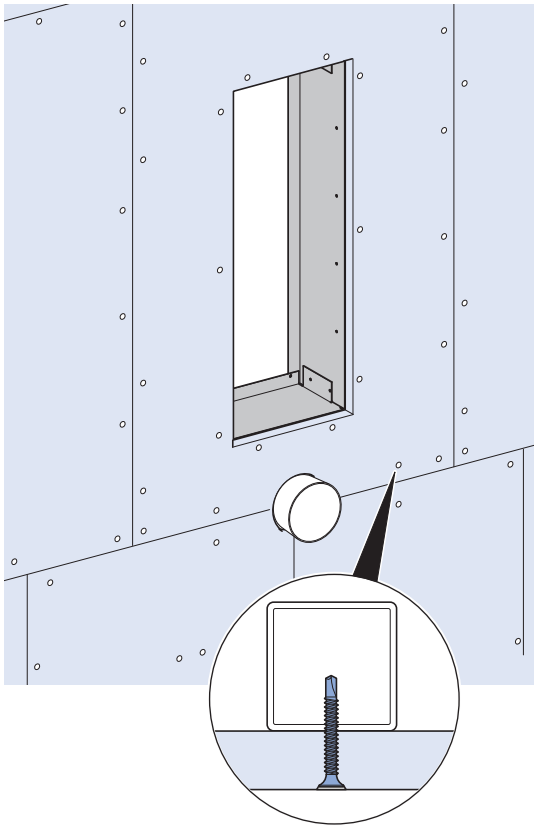

7

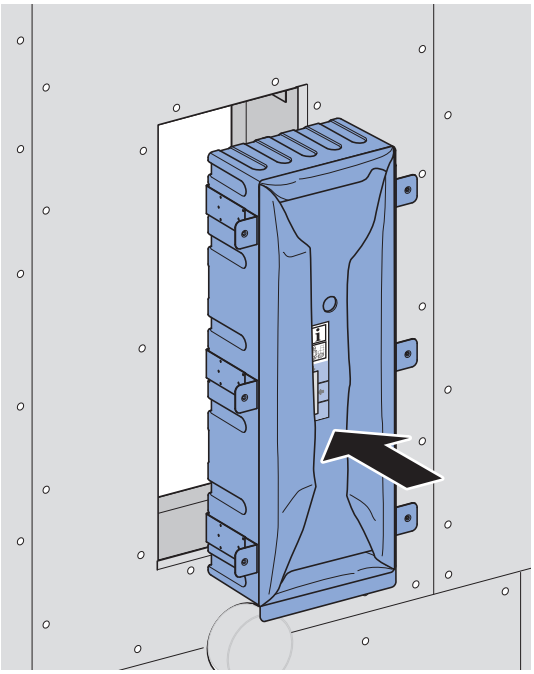

8

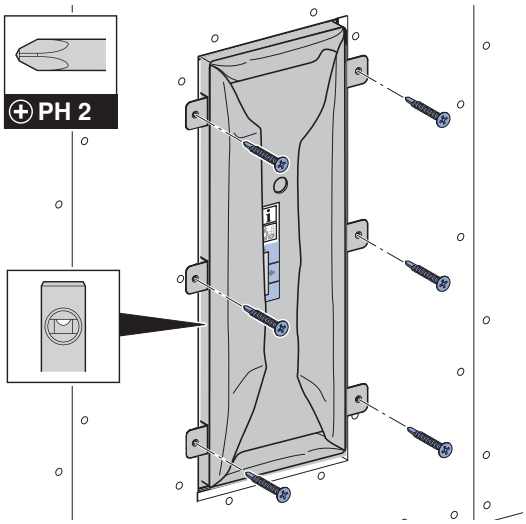

9

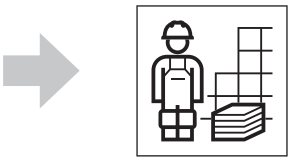

27021602668807691 © 10-2025
968.757.00.0(02)

Geberit International AG
Schachenstrasse 77, CH-8645 Jona
documentation@geberit.com
www.geberit.com

27021602668807691 © 10-2025
968.757.00.0(02)