GEBERIT

GIS Installation System

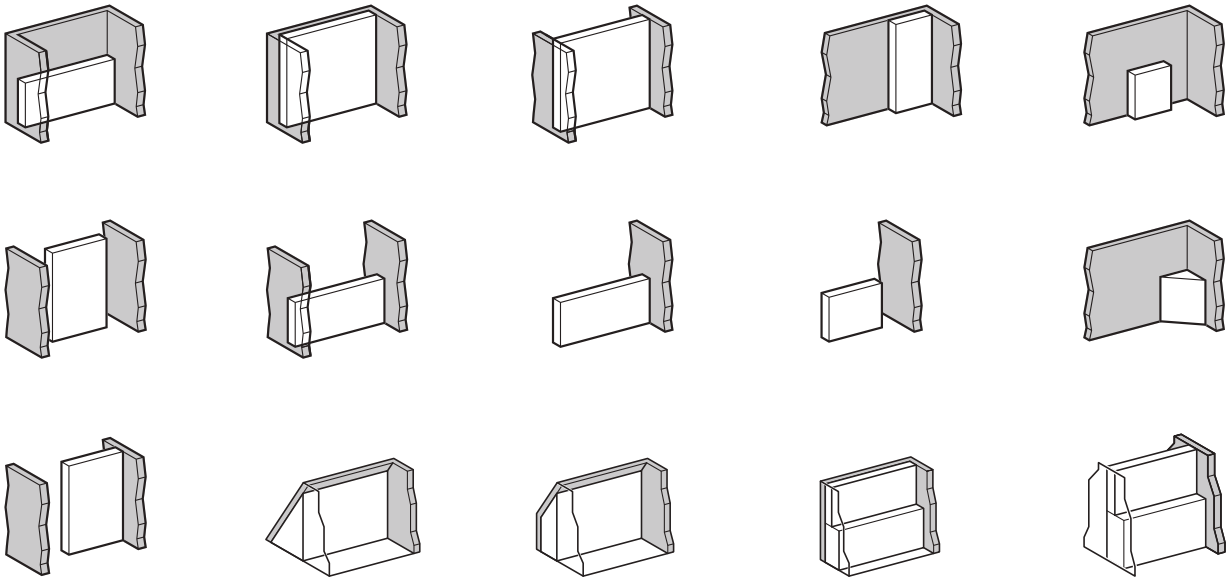

INSTALLATION MANUAL

MONTAGEANLEITUNG
INSTRUCTIONS DE MONTAGE
ISTRUZIONI PER IL MONTAGGIO

KNOW HOW INSTALLED

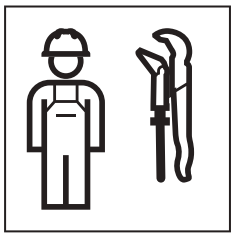

964.124.00.0(07)

36028805360494219 © 05-2025
964.124.00.0(07)

→ 4

→ 13

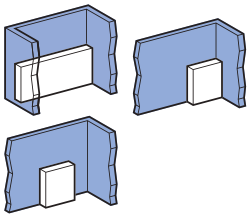
→ 1 18

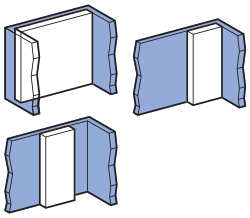
→ 4 21

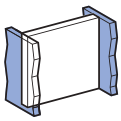
→ 7 24

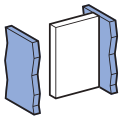
→ 10 27

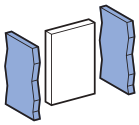
→ 13 30

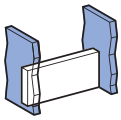
→ 15 32

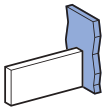
→ 17 34

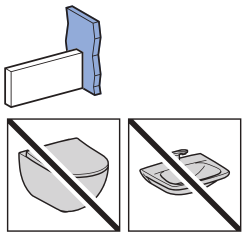
→ 18 35

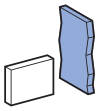
→ 19 36

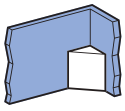
→ 20 37

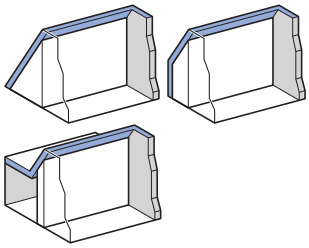
→ 21 38

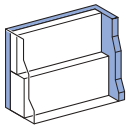
→ 22 39

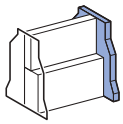
→ 23 40

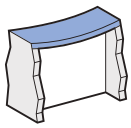
→ 24 41

cm

	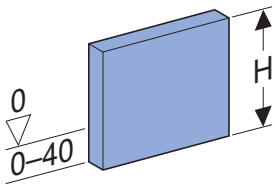	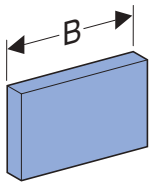	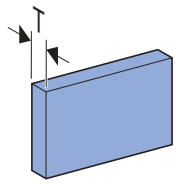
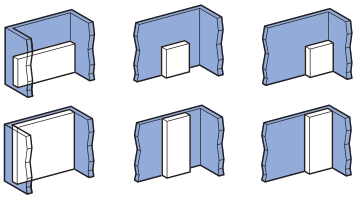	≤ 600	∞	10–70
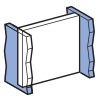	≤ 360	∞	13–70
	≤ 450	≤ 350	13–45
	≤ 600	∞	25–44
	≤ 360	≤ 250	13–60
	≤ 600	≤ 500	25–44
	≤ 360	≤ 250	13–60
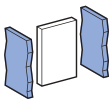	≤ 360	≤ 250	20–44
	≤ 600	≤ 500	25–44
	≤ 360	≤ 250	13–45
	≤ 360	≤ 250	13–45
	≤ 600	≤ 500	25–44
	≤ 220	≤ 500	25–44
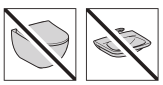	≤ 200	≤ 100	13–45
	≤ 220	≤ 500	25–44

36028805360494219 © 05-2025
964.124.00.0(07)

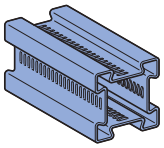

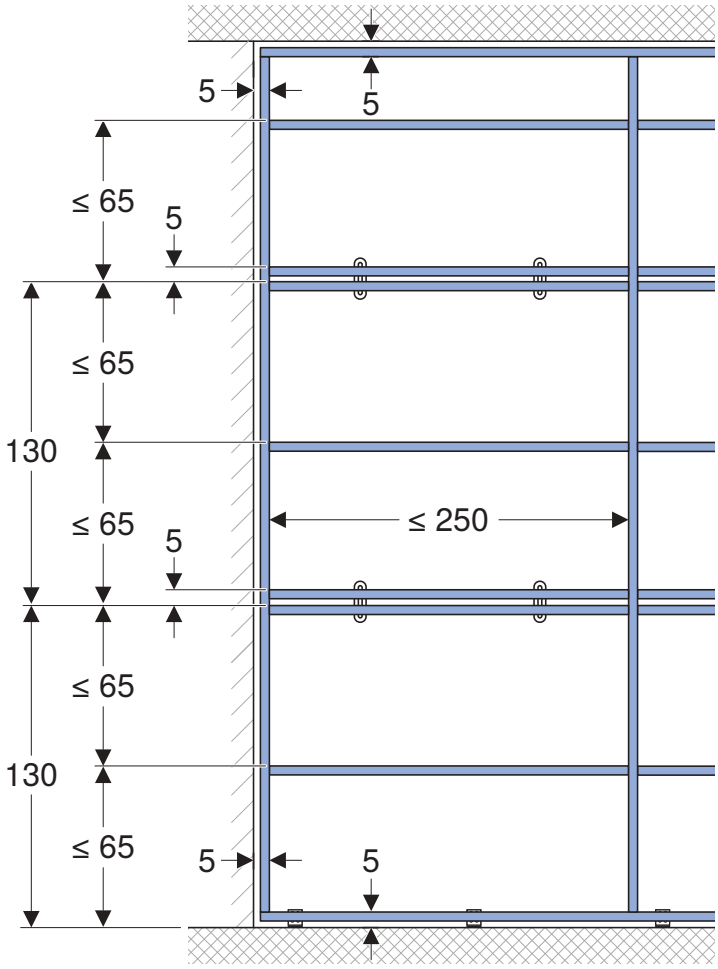
5
5
≤ 65
5
≤ 65
130
≤ 65
≤ 250
5
≤ 65
130
≤ 65
5
5

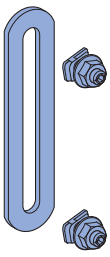

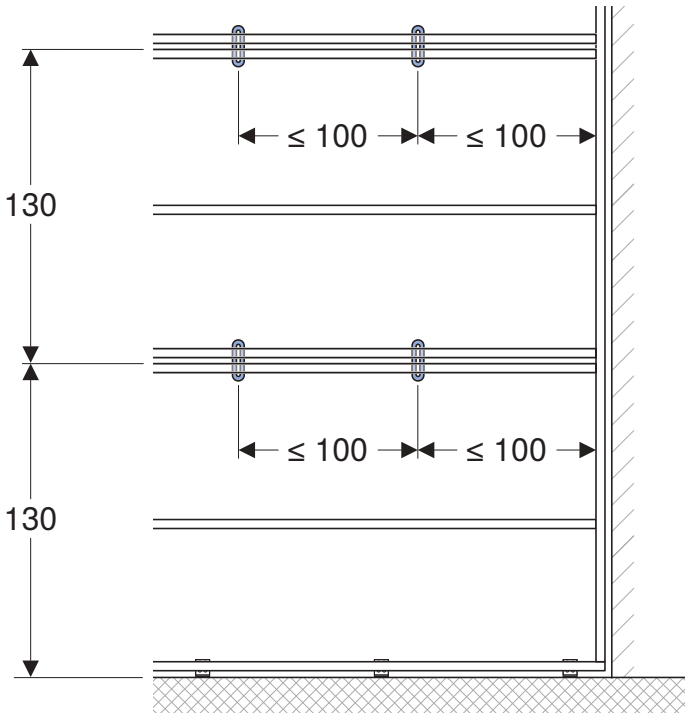
≤ 100
≤ 100
130
≤ 100
≤ 100
130

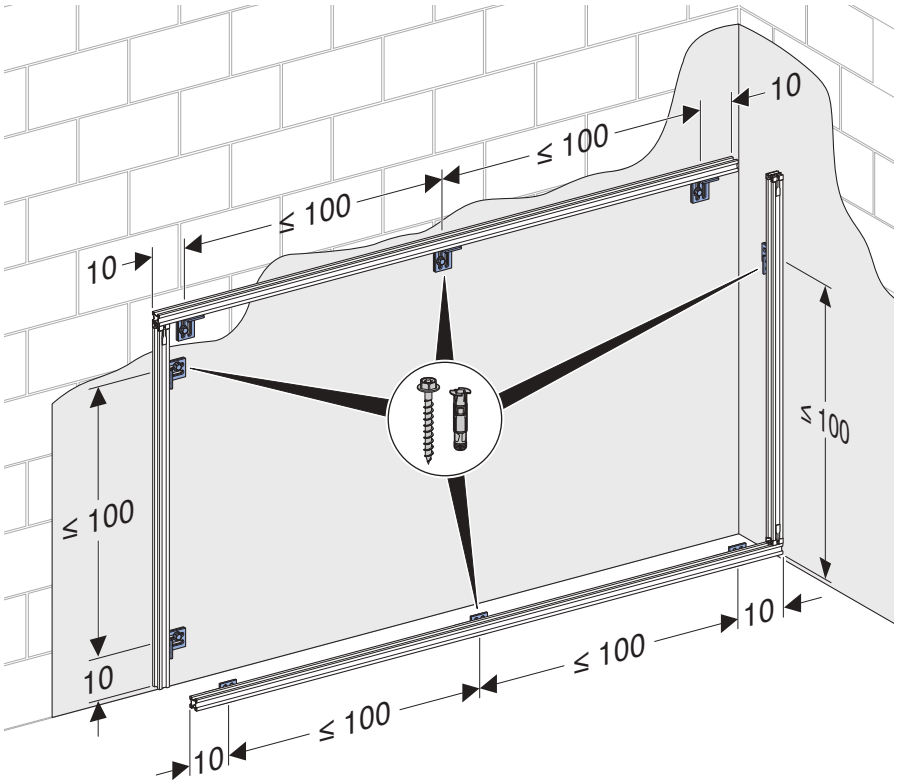

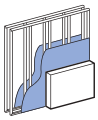

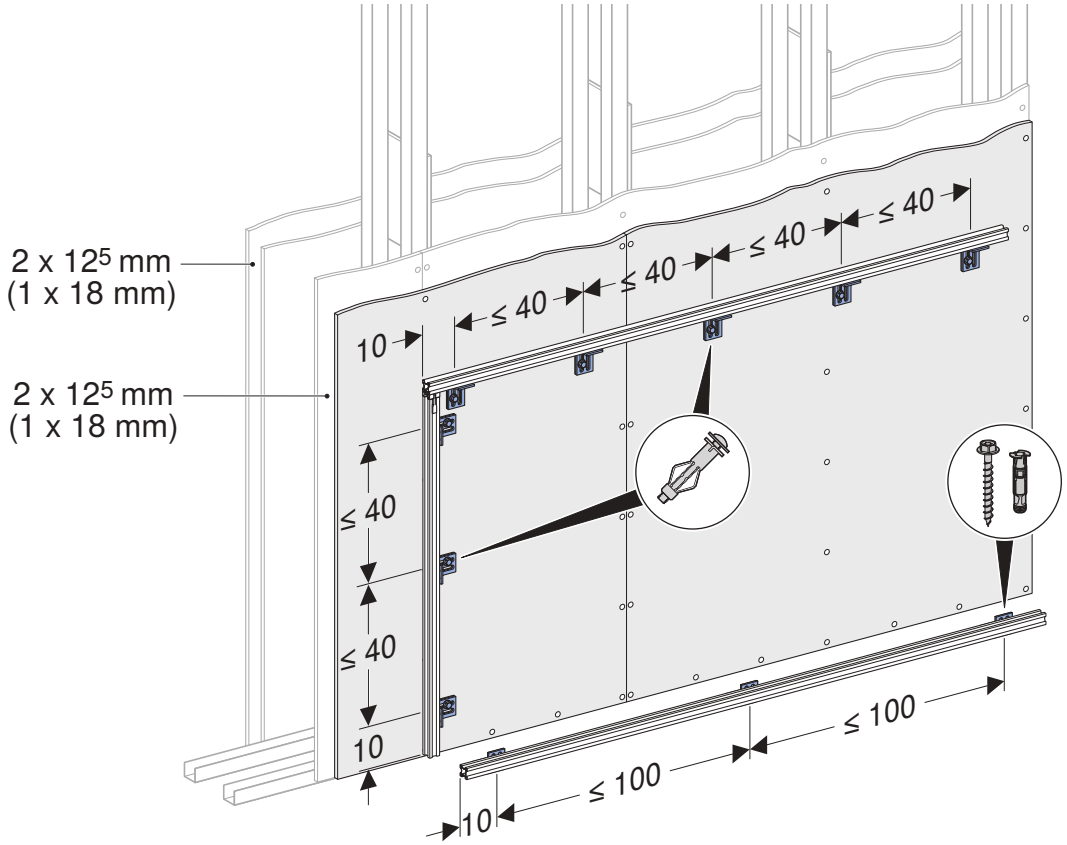

36028805360494219 © 05-2025
964.124.00.0(07)

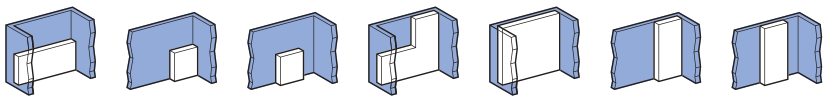

T≤ 45

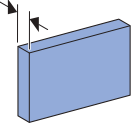

T= 13–24

T= 10–31

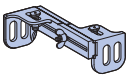

T= 31–45

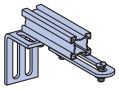

T= 31–45

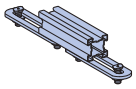

T = 16^{5}–45

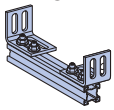

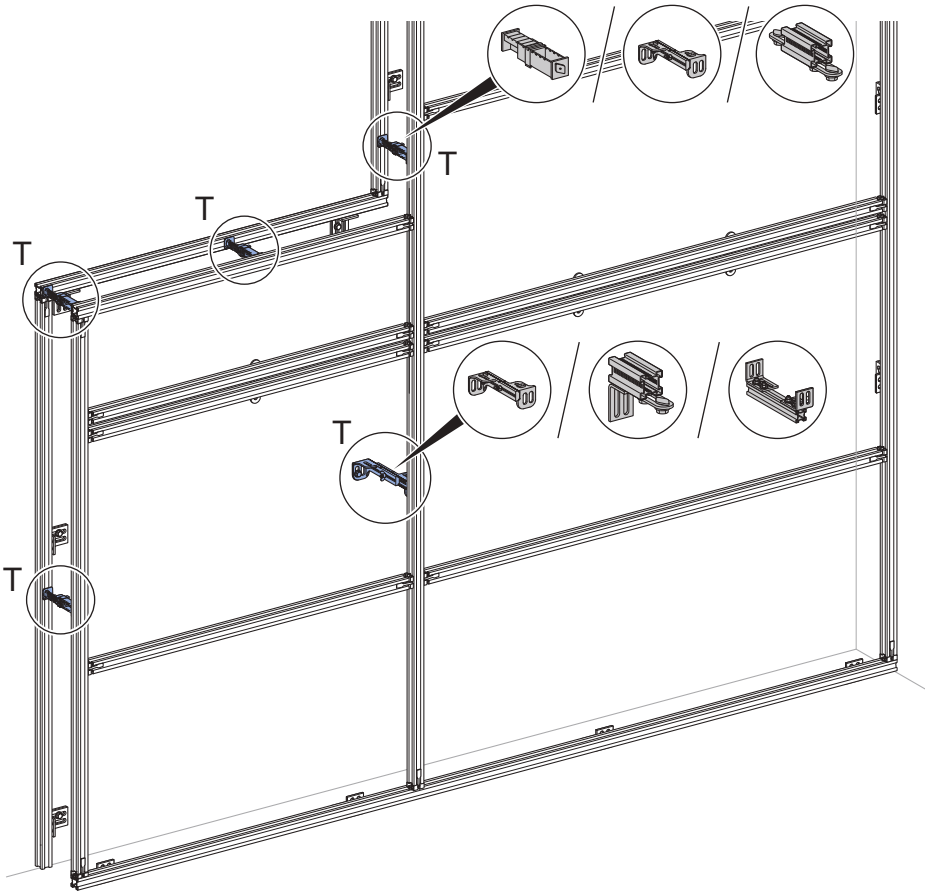

T= 45–70

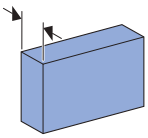

T= 45–70

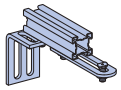

T= 45–70

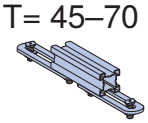

T= 45–70

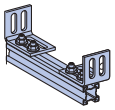

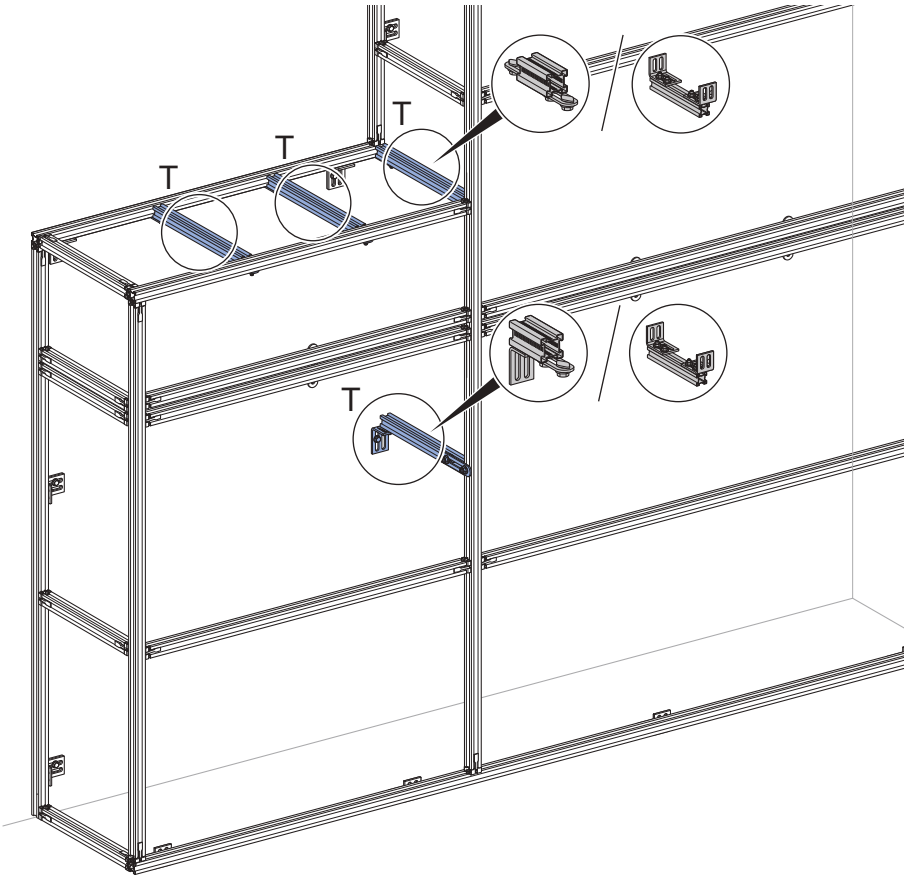

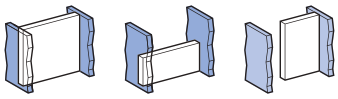

T≤ 45

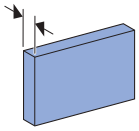

T= 13–24

T= 10⁵–36

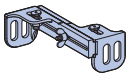

T= 31–45

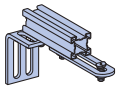

T= 31–45

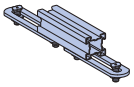

T = 16⁵–45

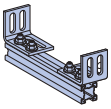

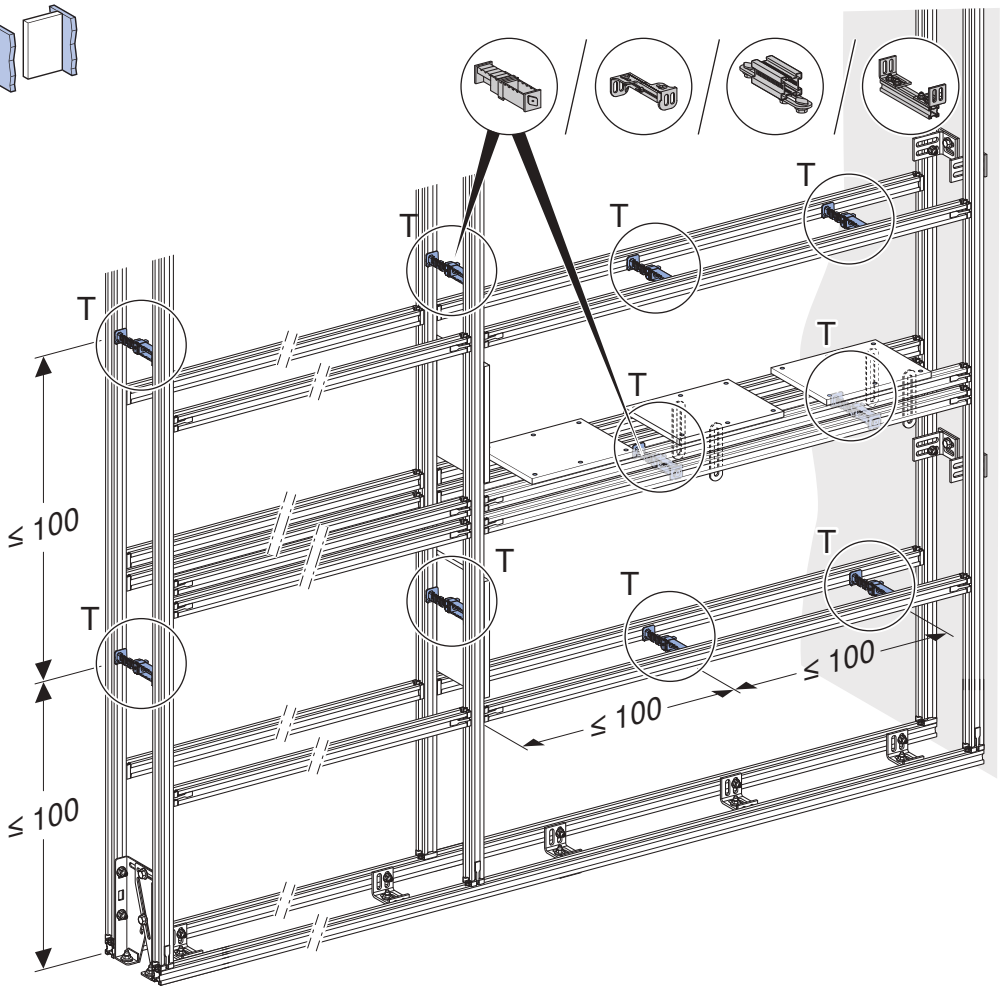

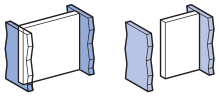

T= 45–70

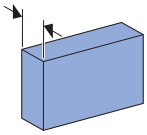

T= 45–70

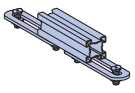

T= 45–70

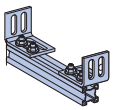

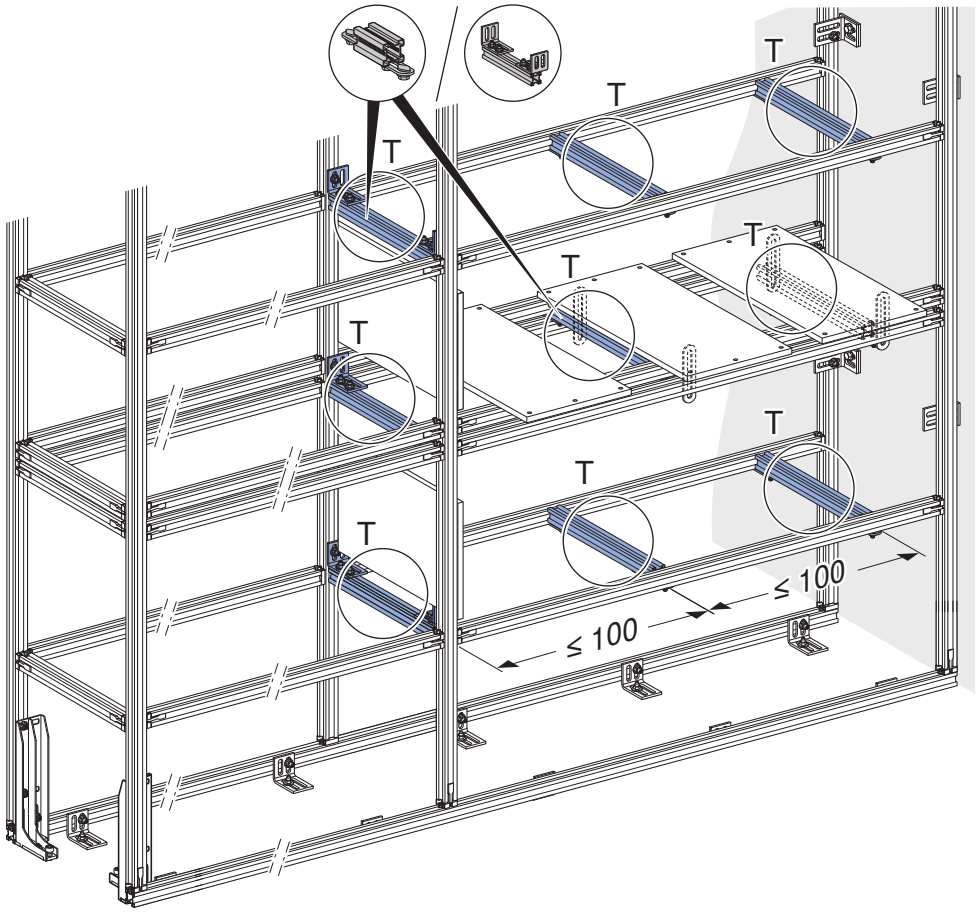

36028805360494219 © 05-2025
964.124.00.0(07)

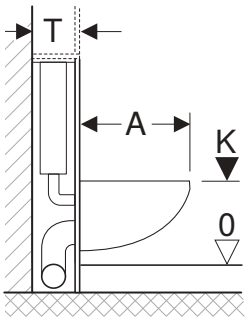

	T_1	T_2	T_3	T_4	V
	16^{5}–24	24^{5}–36	36^{5}–70	16^{5}–70	–
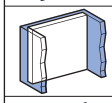	16^{5}–24	18^{5}–31	31^{5}–70	16^{5}–70	–
	21^{5}–24	24^{5}–36	36^{5}–70	21^{5}–70	✓
	21^{5}–24	24^{5}–36	36^{5}–45	21^{5}–45	✓

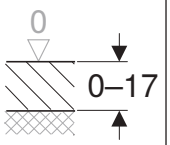

A ≤ 62
K = 41^{+2}_{-1}

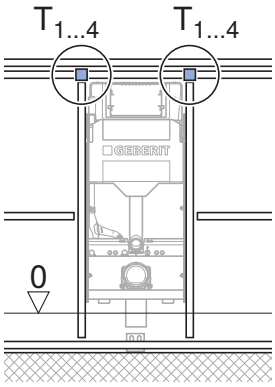

A ≤ 62
K = 44–52

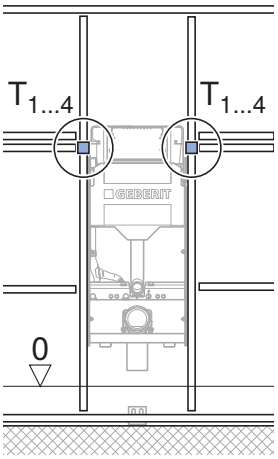

A ≤ 70
K = 44–52

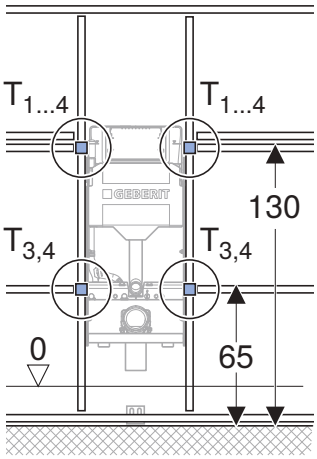

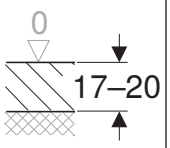

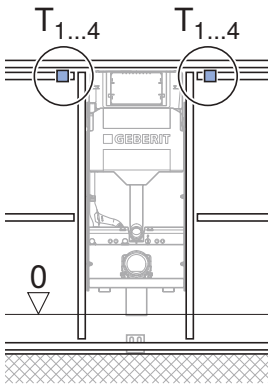

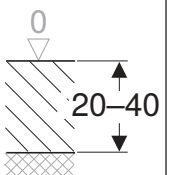

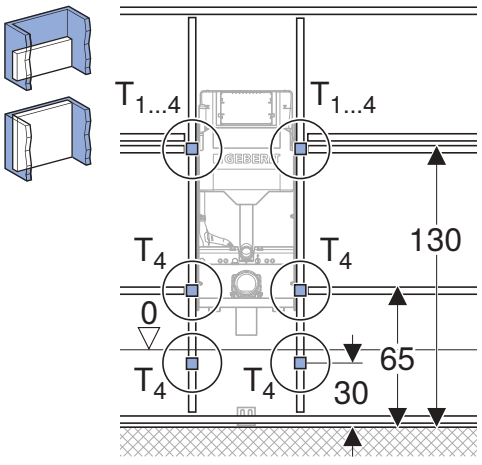

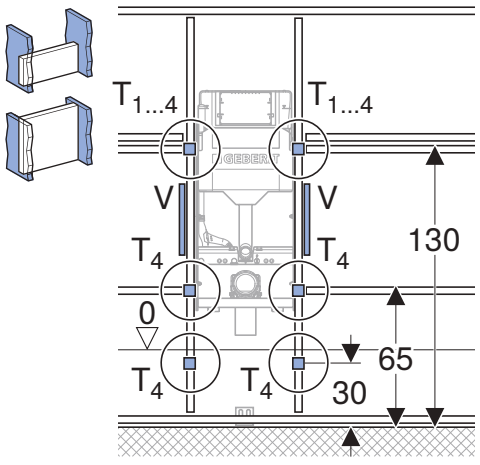

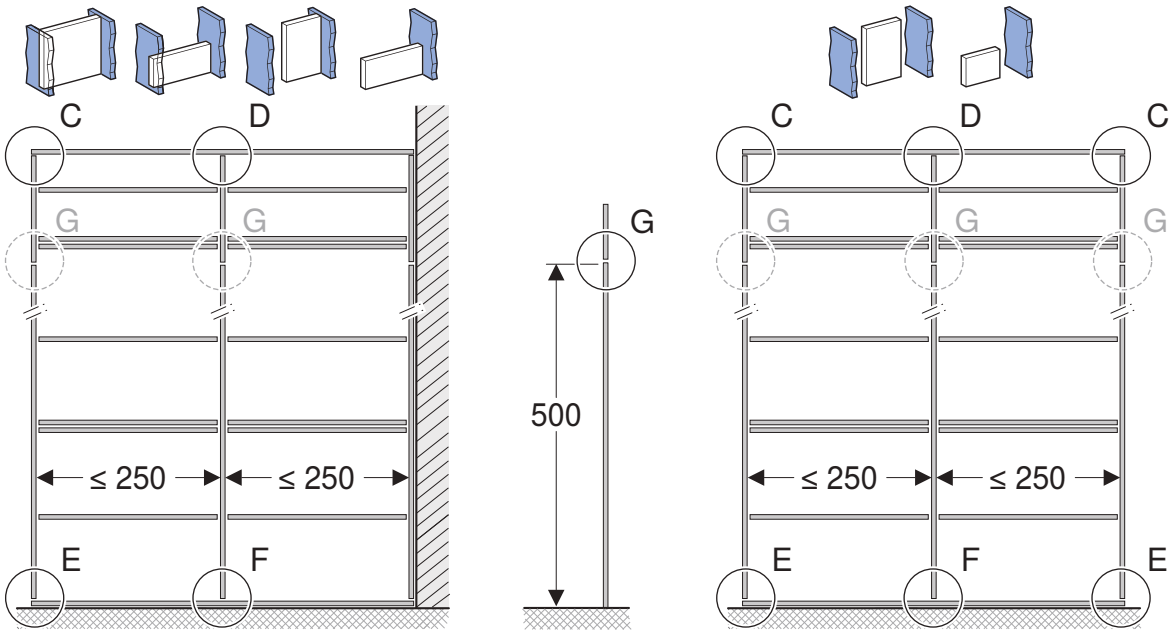

	T, H, B	C	D	E	F	G H > 500	
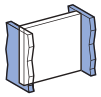	H ≤ 360 B = ∞ T ≤ 70	–	–	–	–	–	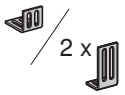 2 x
	H ≤ 600 B = ∞ T ≤ 45	–	–	–	2 x	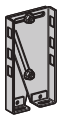	2 x
	H ≤ 360 B ≤ 250 T ≤ 45	–	–	–	–	–	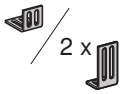 2 x
	H ≤ 600 B ≤ 500 T ≤ 44	–	2 x	–	2 x	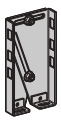	2 x
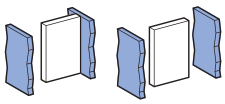	H ≤ 360 B ≤ 250 T ≤ 44	–	–		–	–	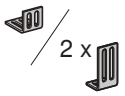 2 x
	H ≤ 600 B ≤ 500 T ≤ 44	–	–	2 x 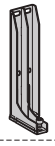	2 x 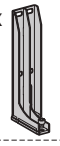		2 x
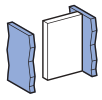	H ≤ 360 B ≤ 250 T ≤ 60	–	–	2 x	–	–	2 x
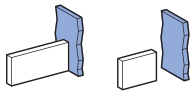	H ≤ 220 B ≤ 500 T ≤ 44	2 x 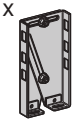	2 x 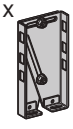	2 x	2 x	–	2 x

360288053604942l9 © 05-2025
964.124.00.0(07)

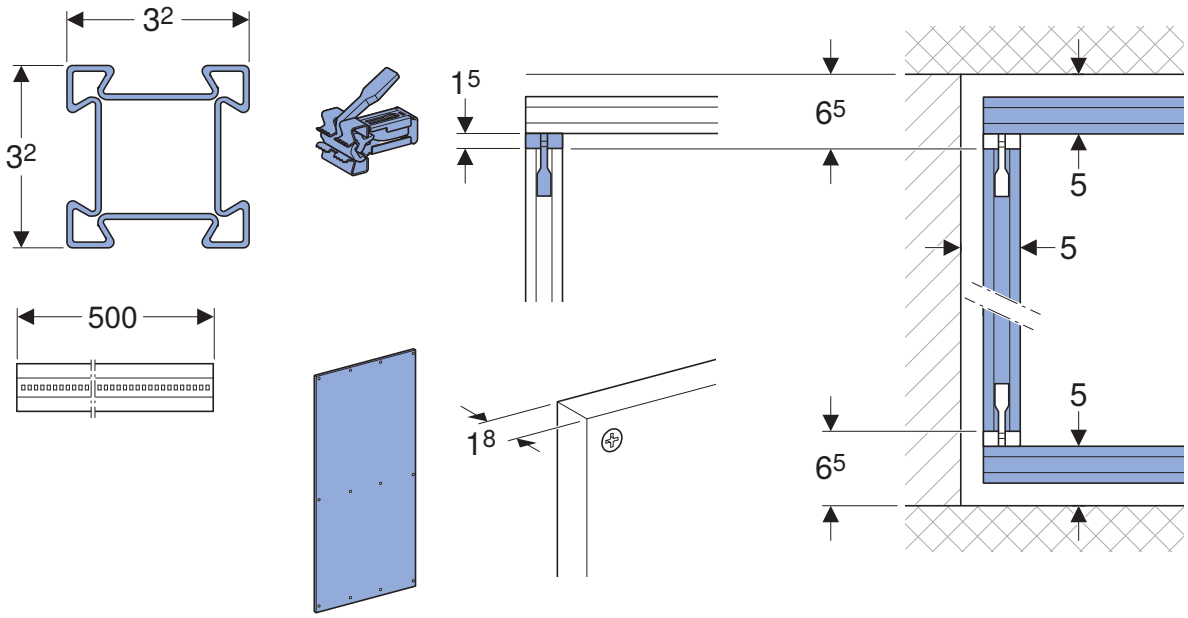
32
32
500
15
65
5
5
5
65
18

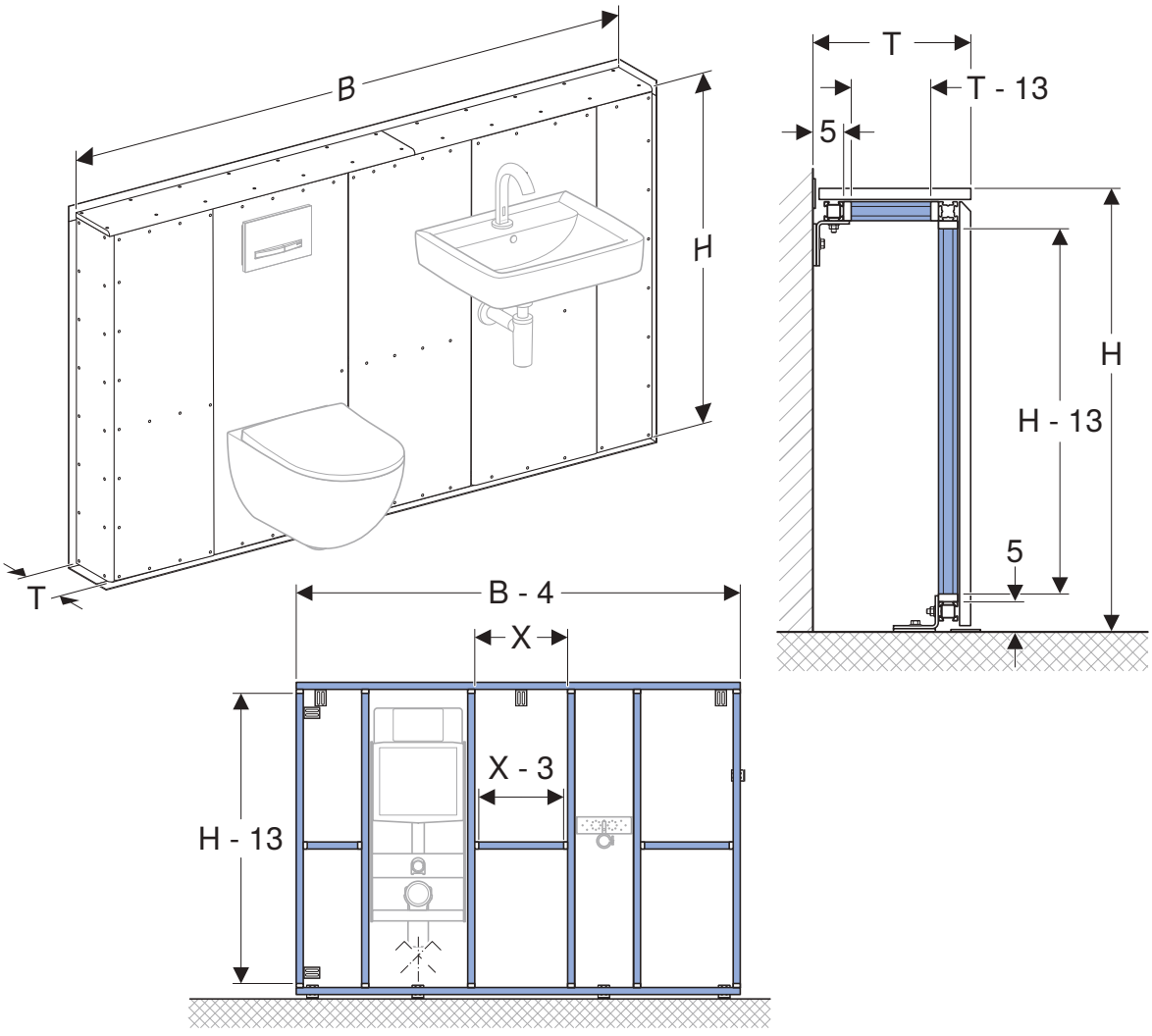
B
H
T
T
T - 13
5
H
H - 13
5
B - 4
X
X - 3
H - 13

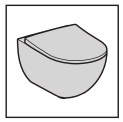

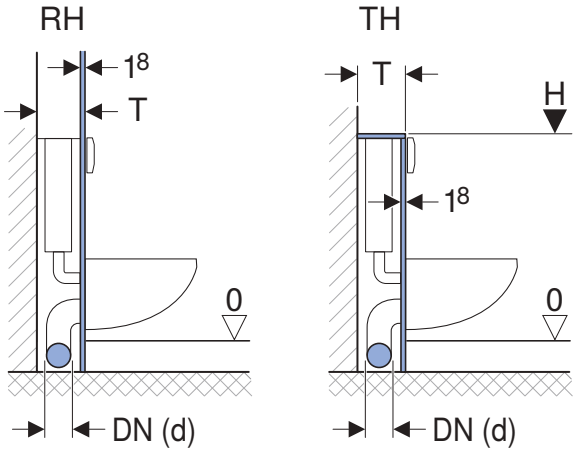

[cm]	T DN 50 (d 63) 56/63	T DN 80 (d 90) 75/90	T DN 100 (d 110) 110	H
	-	16[5]	19[5]	≥ 114
Omega	-	RH 16[5] TH ← 18[5] ↓ 22	RH 19[5] TH ← 19[5] ↓ 22	↓ 87–104 ← ≥ 87
	13	16	18	≥ 87
	13	16	18	≥ 114 ≥ 142

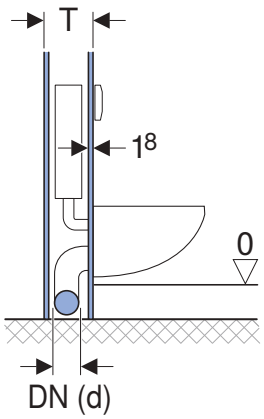

[cm]	DN 50 (d 63) 56/63	T DN 80 (d 90) 75/90	T DN 100 (d 110) 110	2 x DN 80 (d 90) 75/90	2 x DN 100 (d 110) 110
		21[5]	24[5]	25	27
Omega		23[5]	24[5]	25	27
	18	21	23	25	27
	18	21	23	25	27

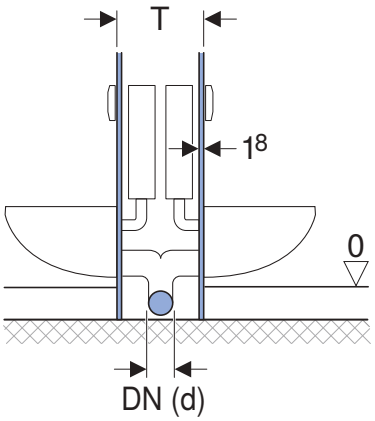

[cm]	DN 50 (d 63) 56/63	T DN 80 (d 90) 75/90	T DN 100 (d 110) 110	2 x DN 80 (d 90) 75/90	2 x DN 100 (d 110) 110
		29	31	29	31
Omega		29	31	29	31
		24	24	25	27
Omega		26	26	26	27
	18	21	22	25	27
	18	21	22	25	27

360288053604942l9 © 05-2025
964.124.00.0(07)

1

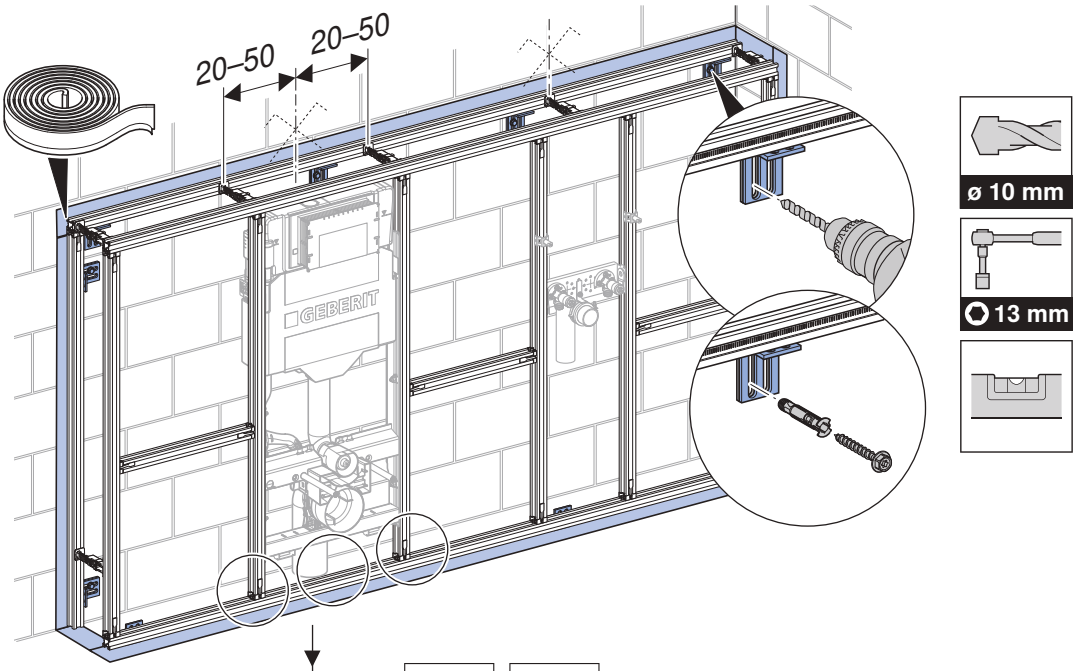

A / B / C / D

A

7^5 x 5^5

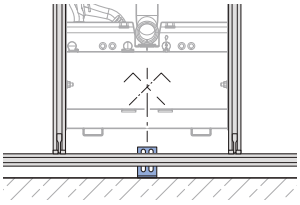

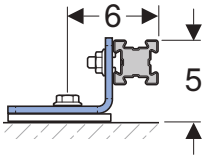

B

12 x 5^5

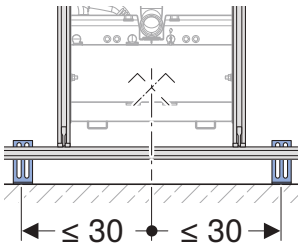

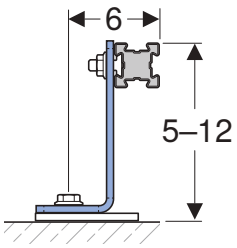

C

13 x 13

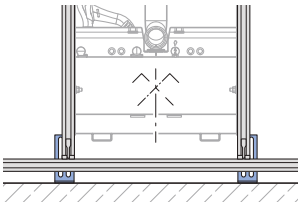

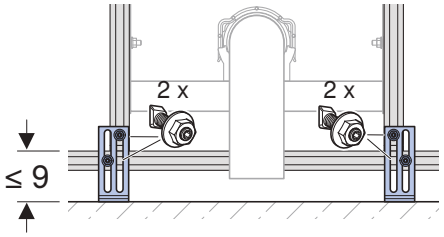

D

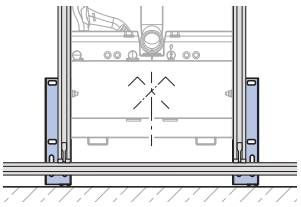

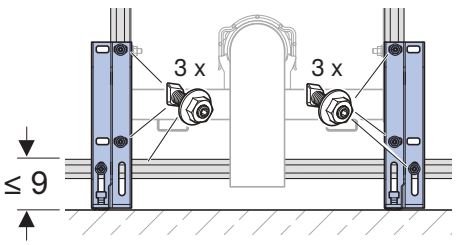

2

✓

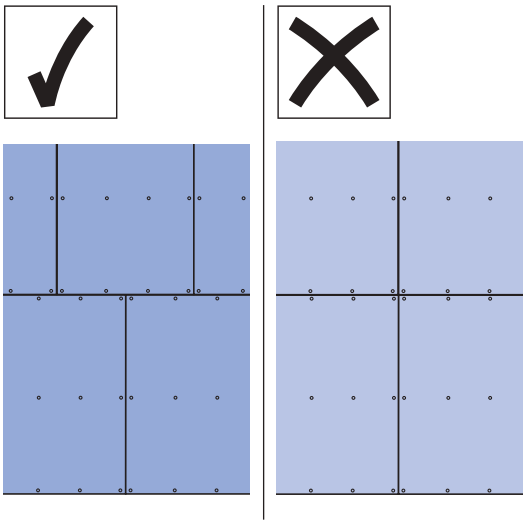

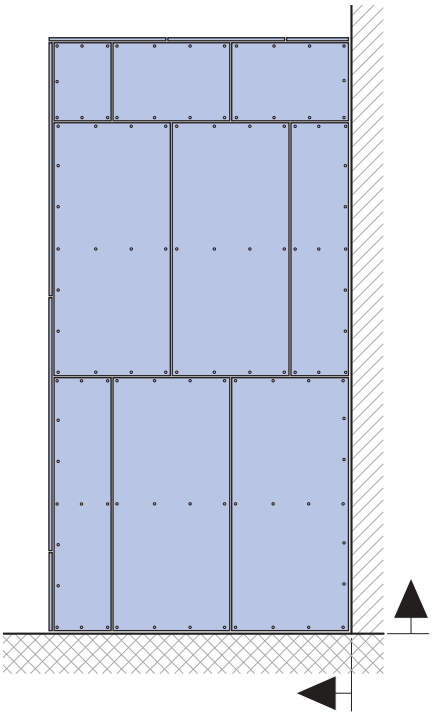

1

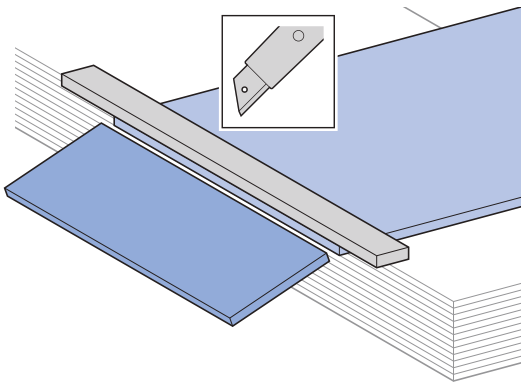

2

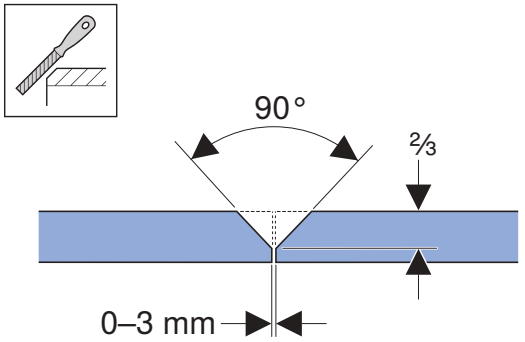

3

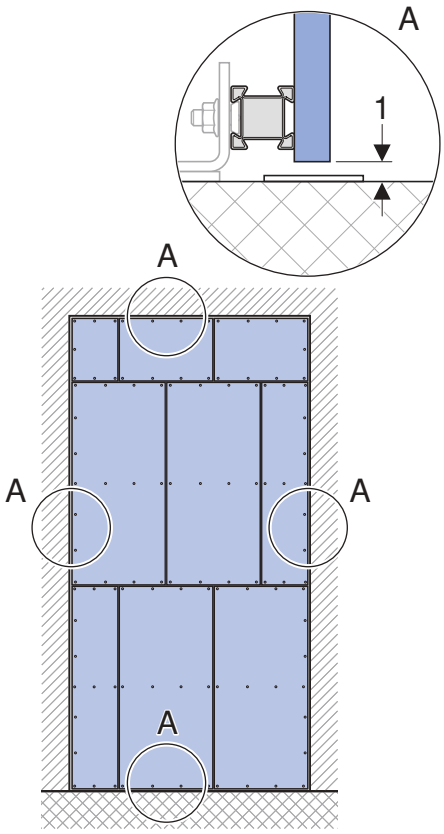

36028805360494219 © 05-2025
964.124.00.0(07)

4

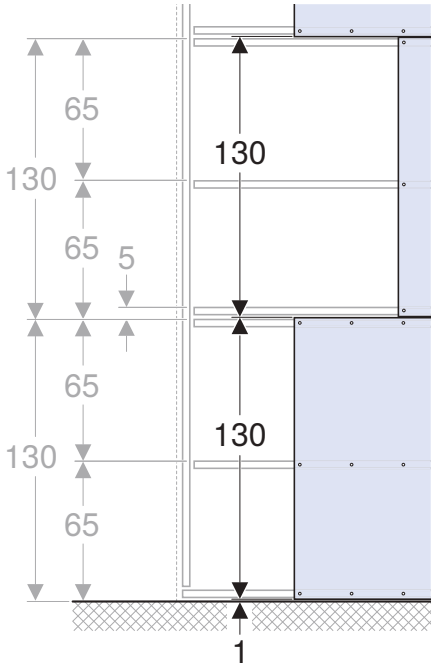

5

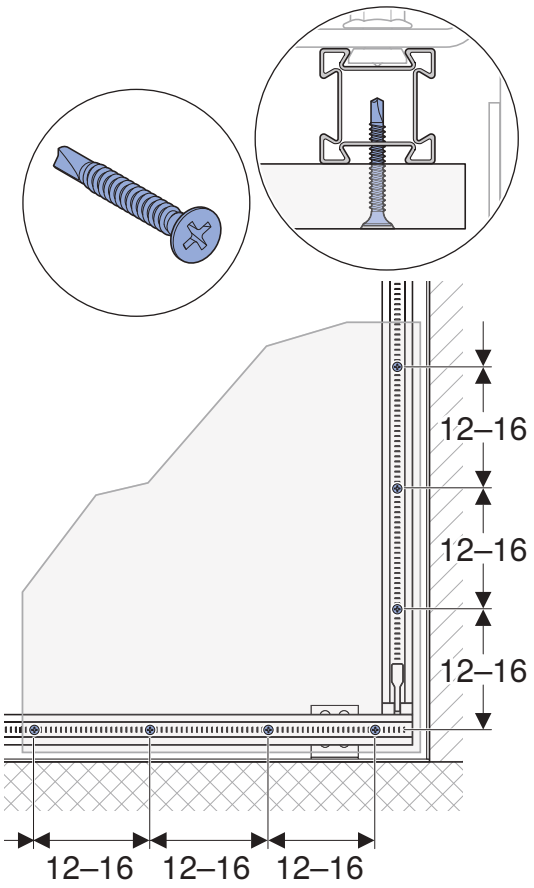

6

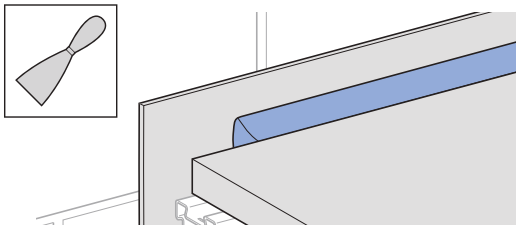

7

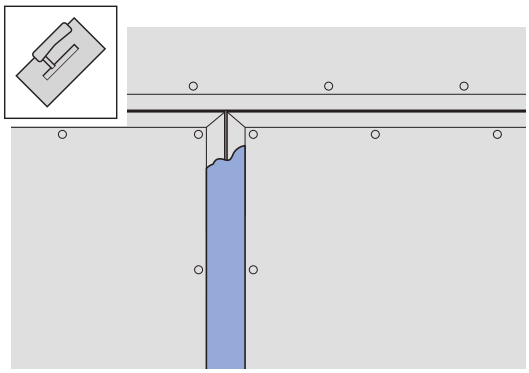

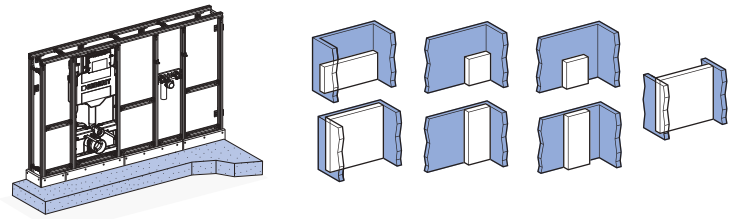

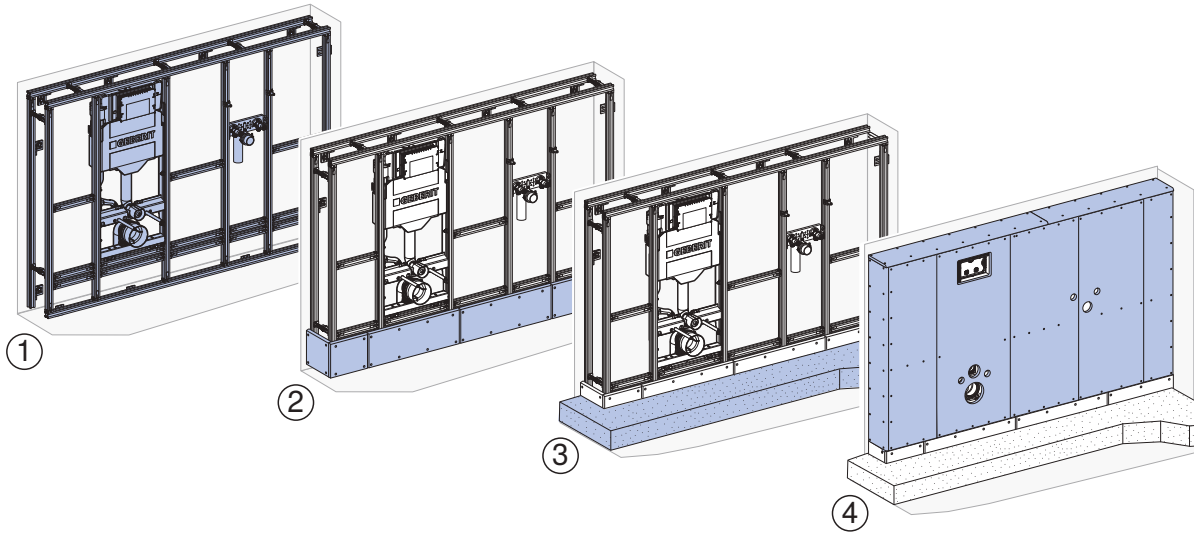

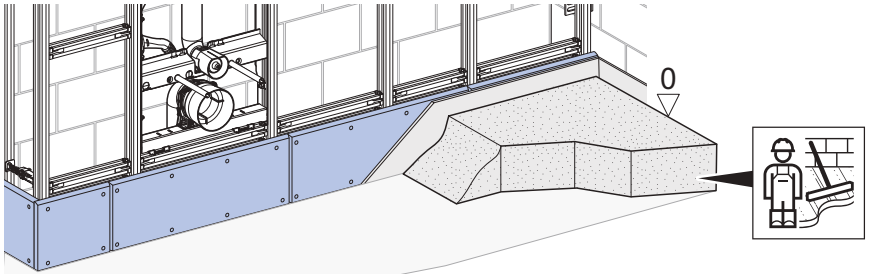

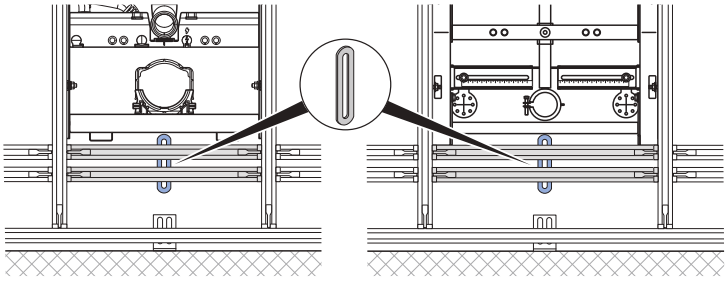

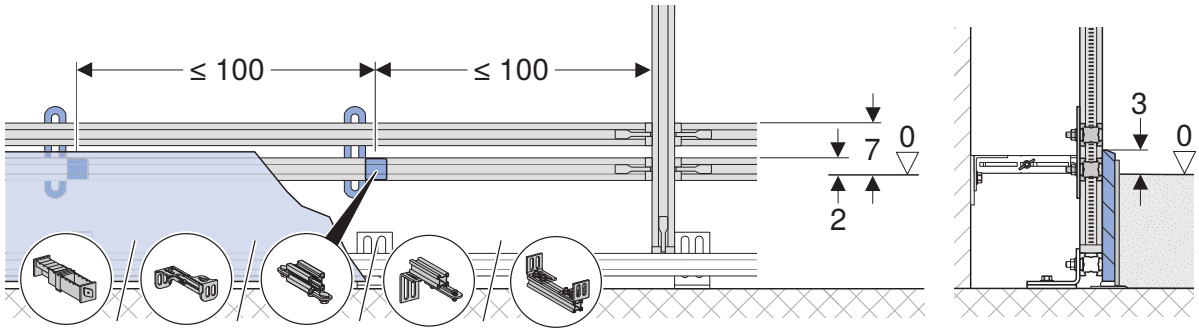

36028805360494219 © 05-2025
964.124.00.0(07)

3

1

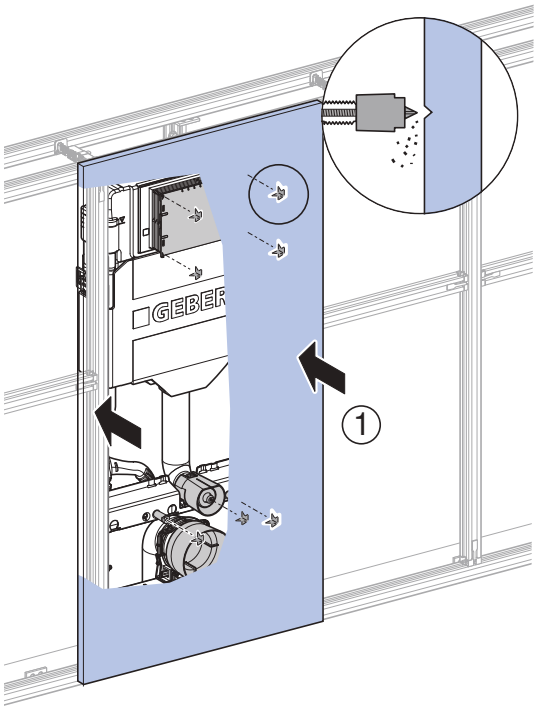

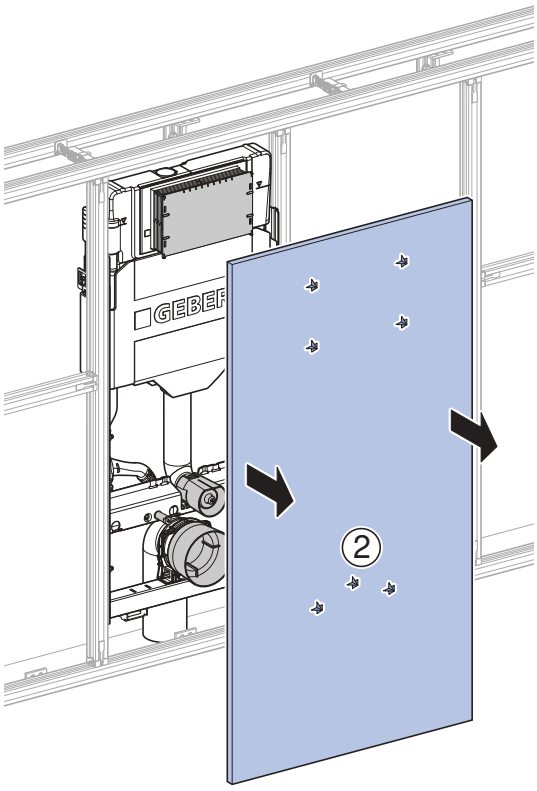

2

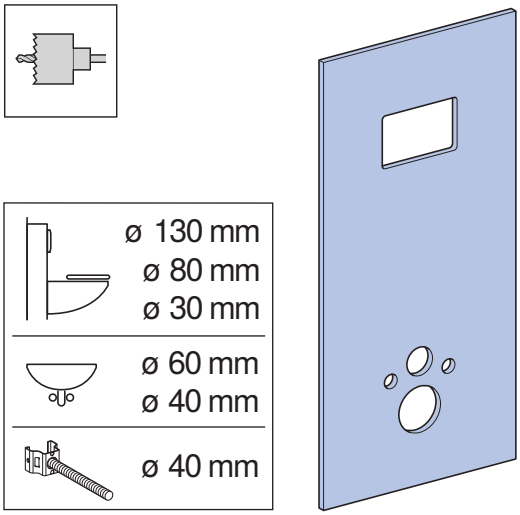

3

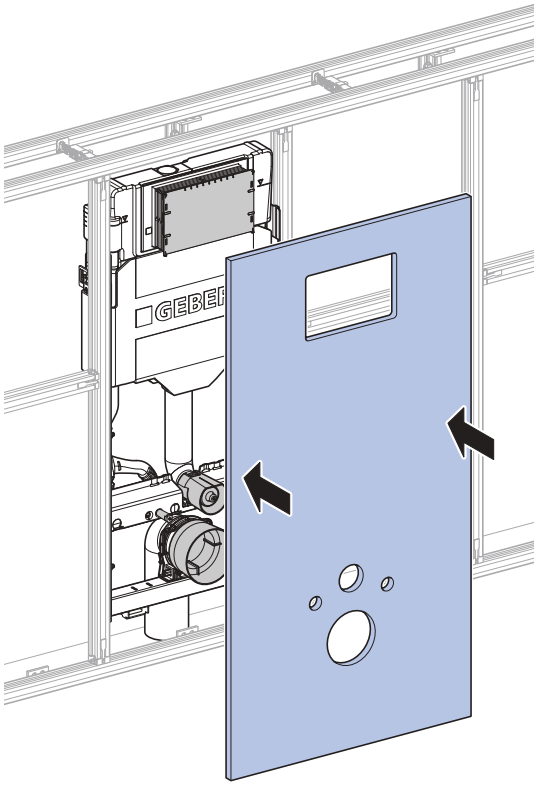

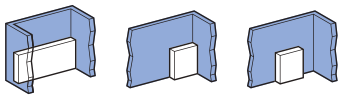

H	B	T	
≤ 500	∞	≤ 45	✓
≤ 500	∞	≤ 70	
≤ 600	∞	≤ 45	

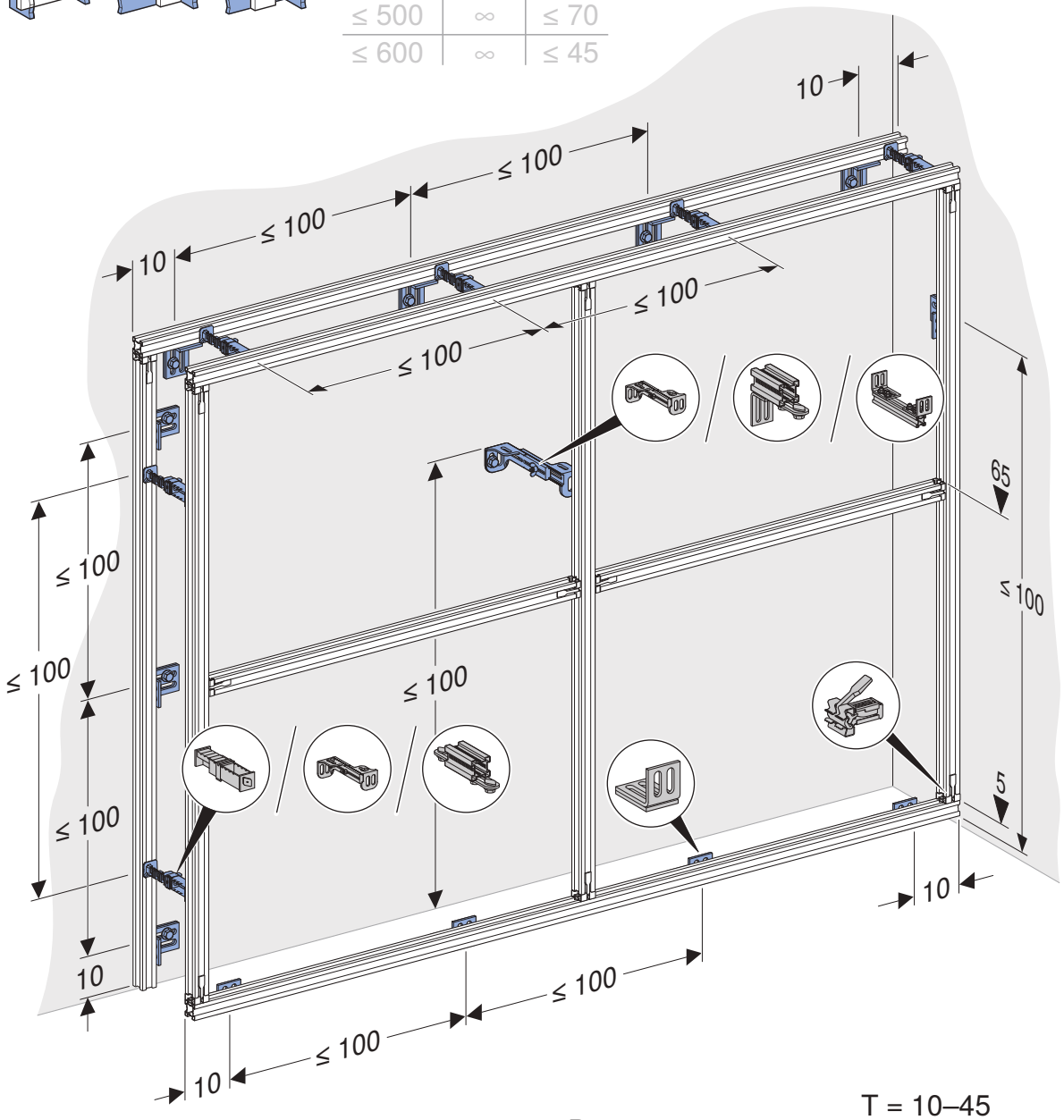

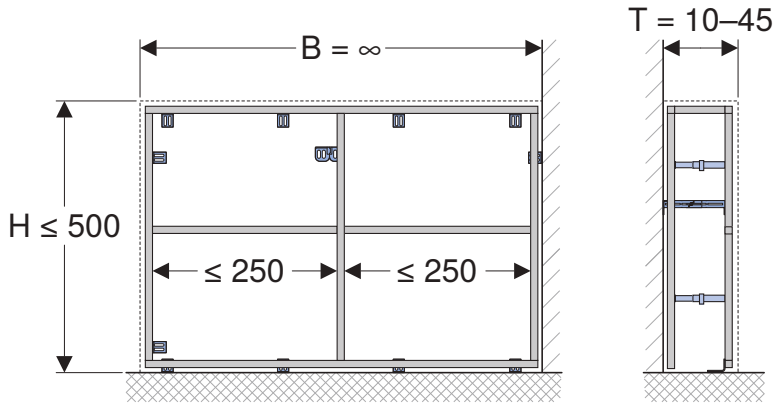

36028805360494219 © 05-2025
964.124.00.0(07)

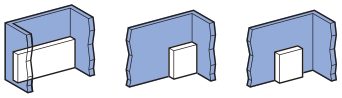

H	B	T	
≤ 500	∞	≤ 45	
≤ 500	∞	≤ 70	✓
≤ 600	∞	≤ 45	

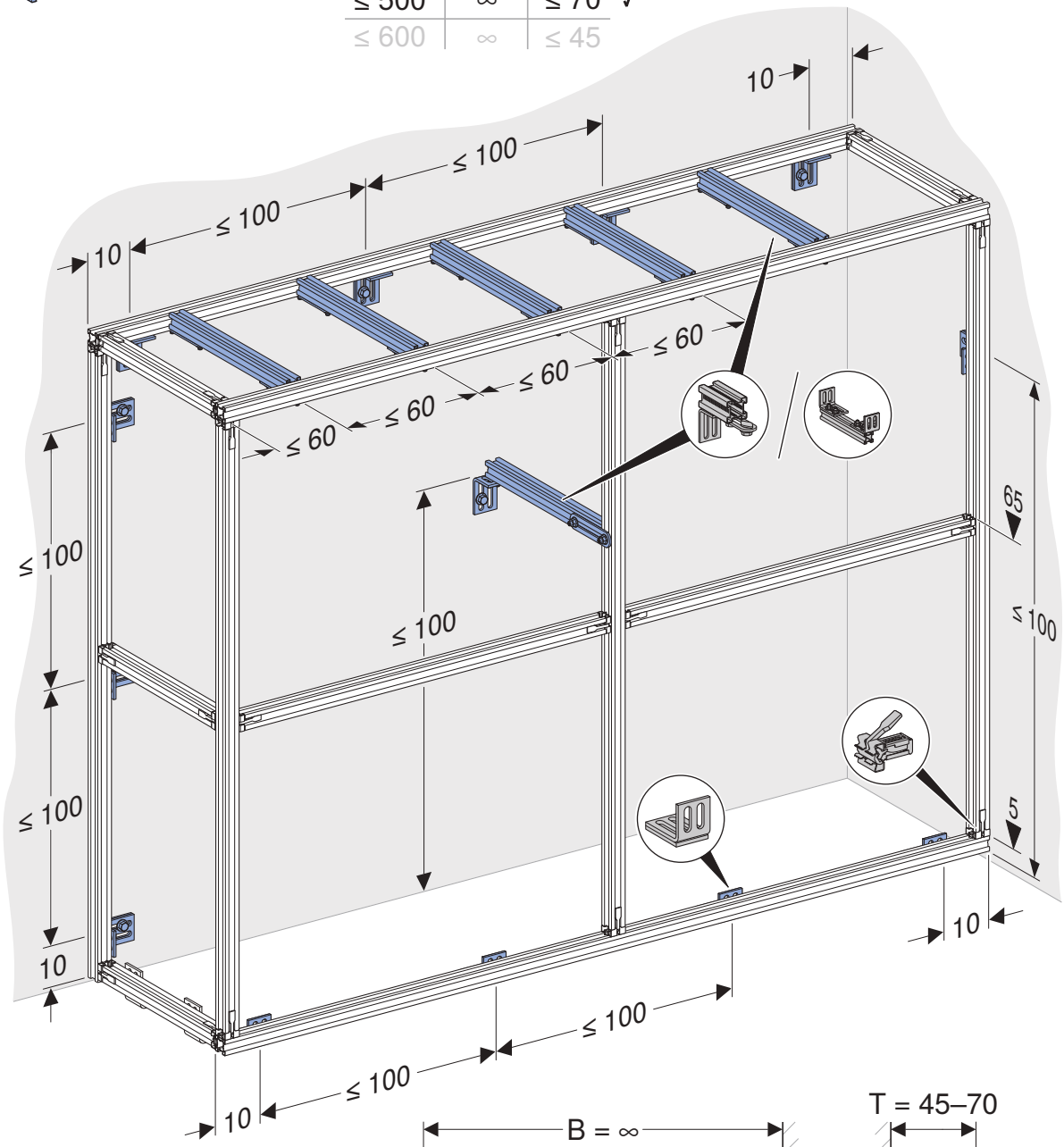

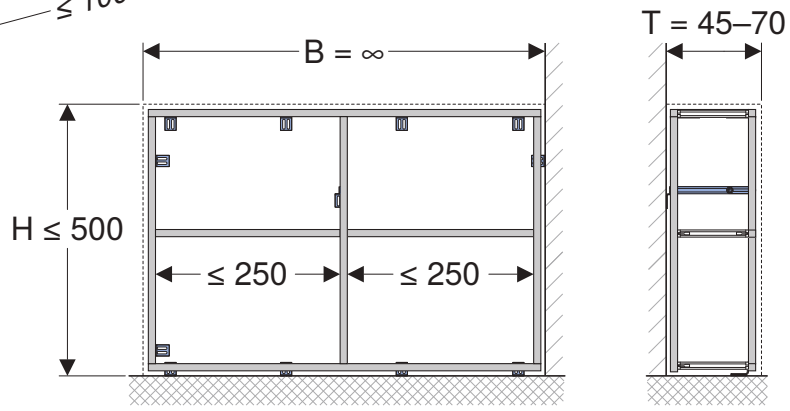

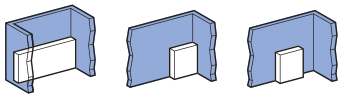

H	B	T
≤ 500	∞	≤ 45
≤ 500	∞	≤ 70
≤ 600	∞	≤ 45 ✓

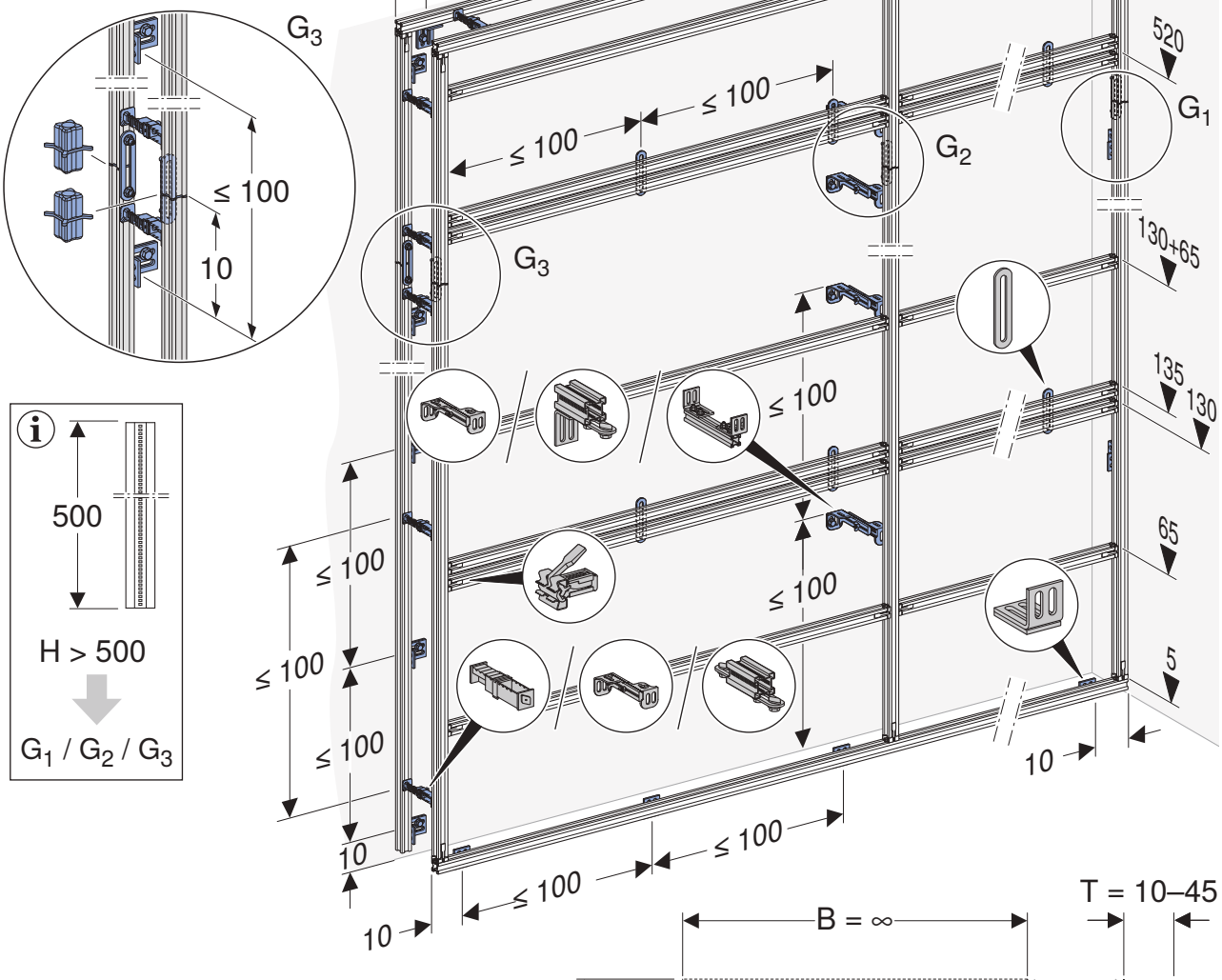

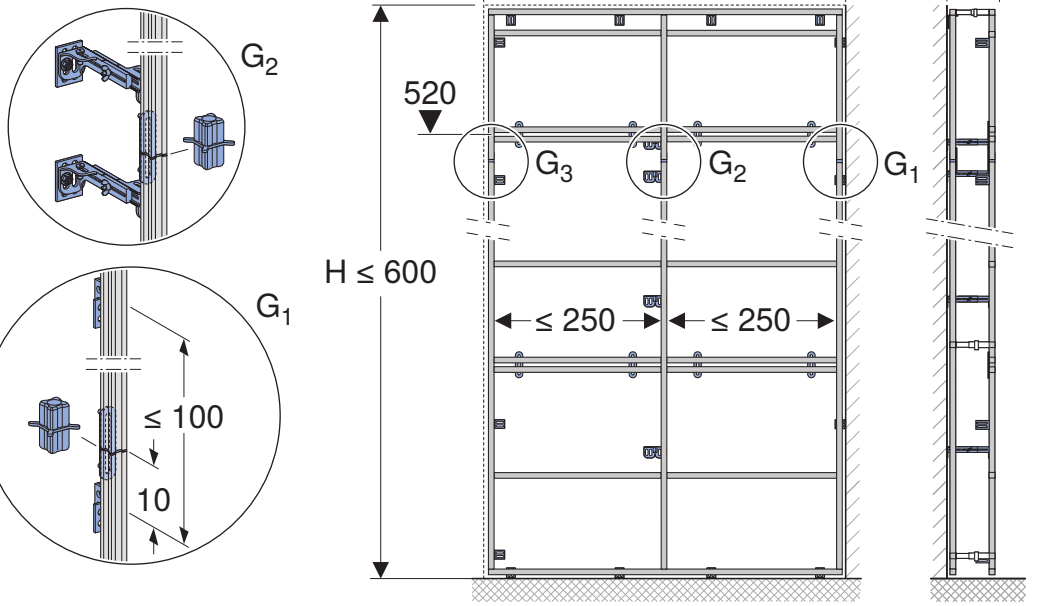

36028805360494219 © 05-2025
964.124.00.0(07)

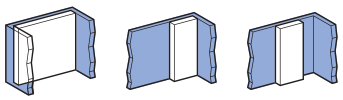

H	B	T	
≤ 500	∞	≤ 45	✓
≤ 500	∞	≤ 70	
≤ 600	∞	≤ 45	

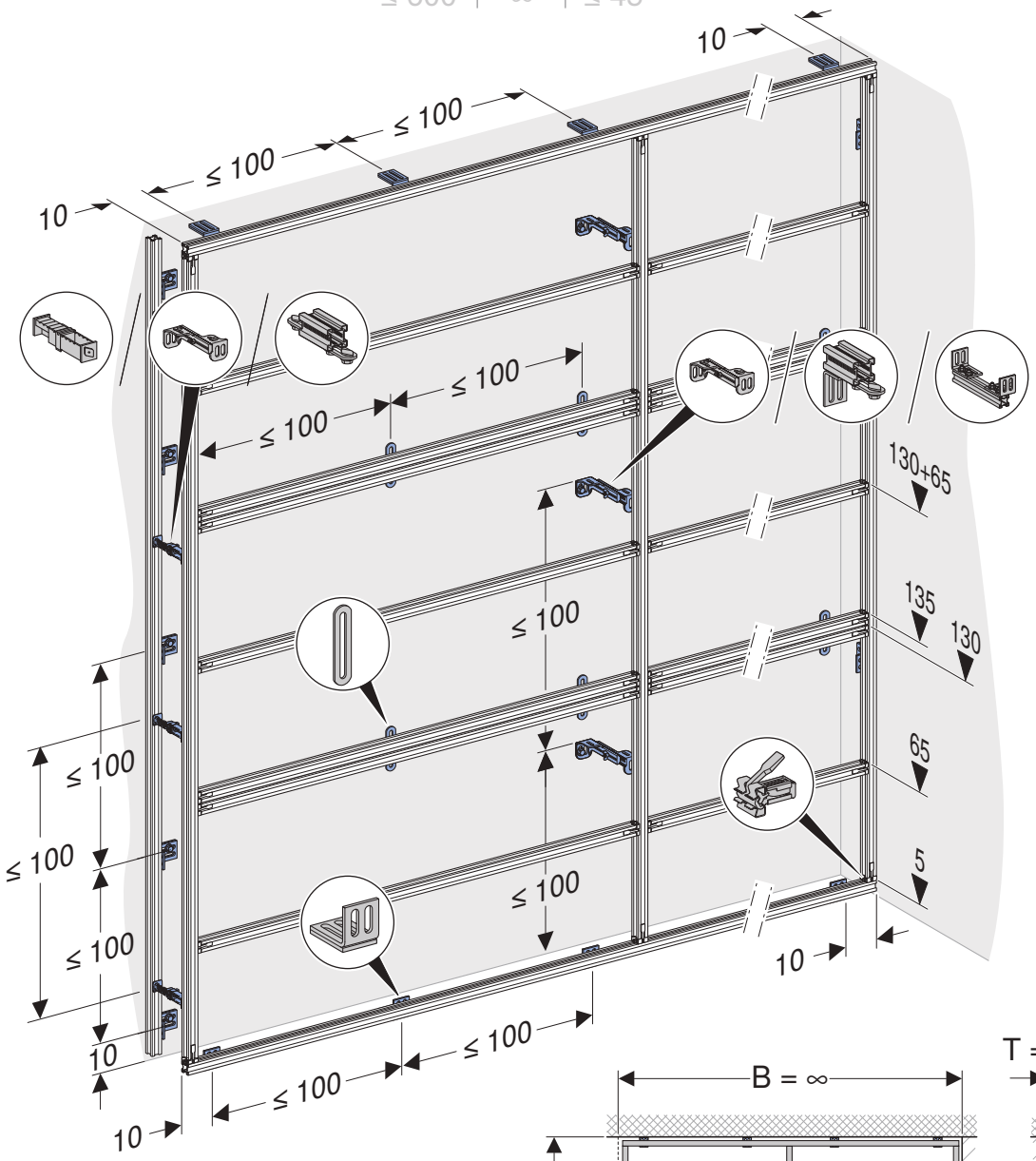

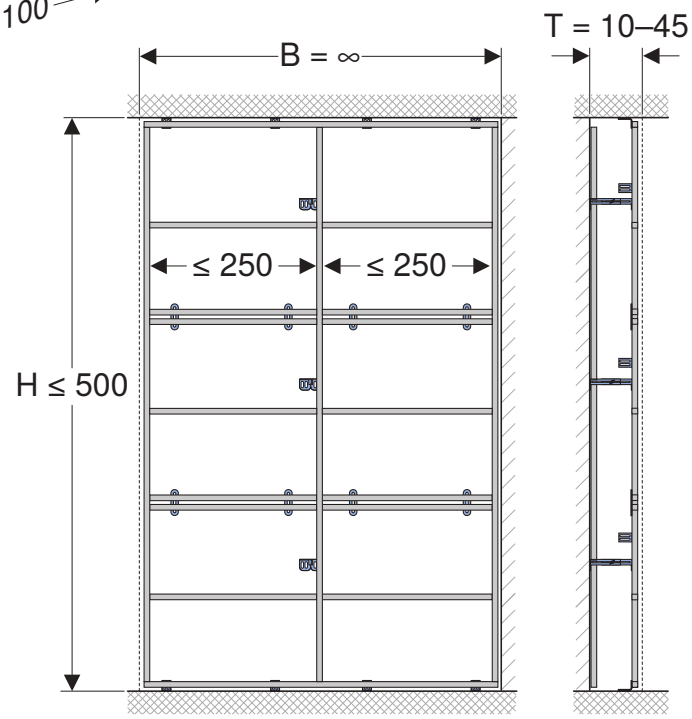

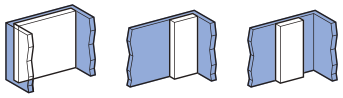

H	B	T	
≤ 500	∞	≤ 45	
≤ 500	∞	≤ 70	✓
≤ 600	∞	≤ 45	

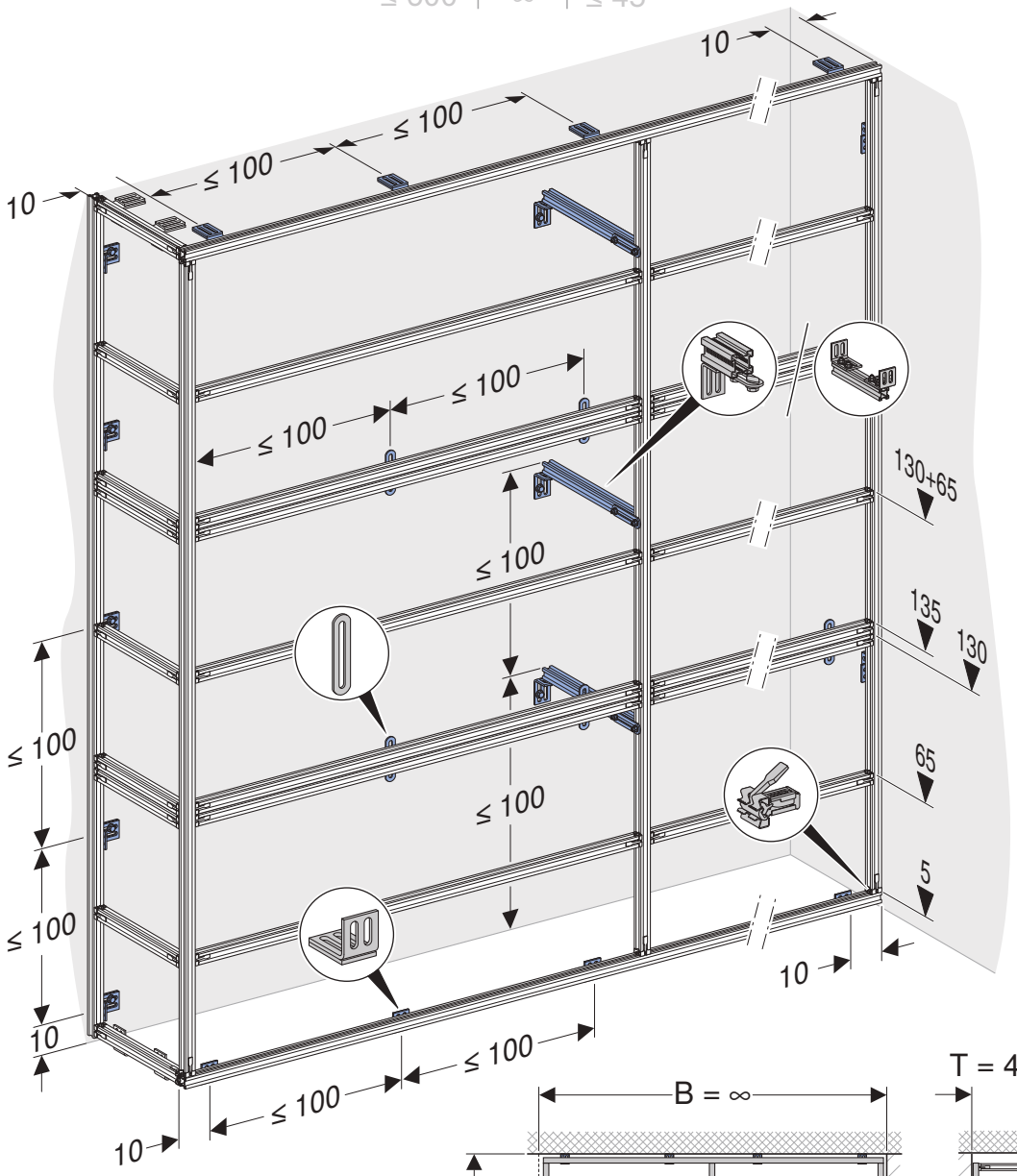

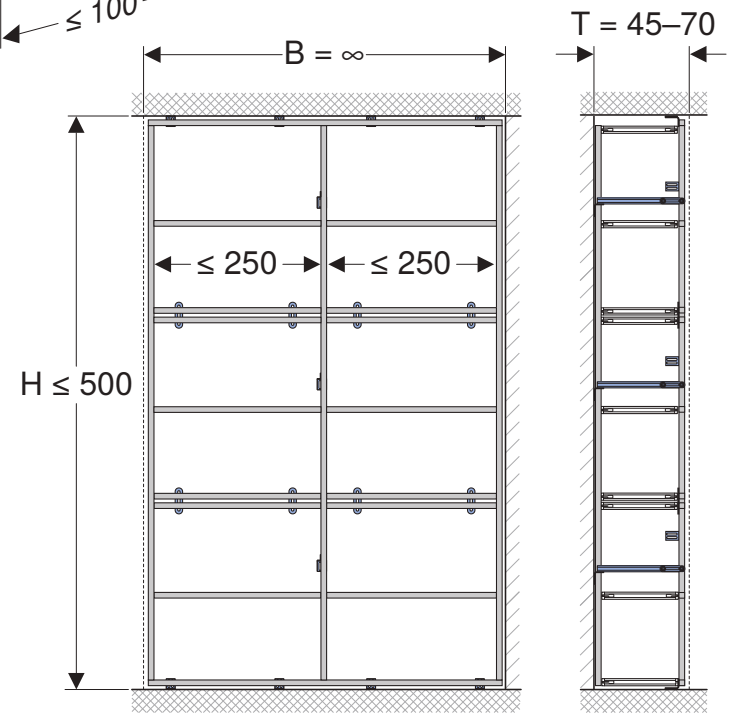

36028805360494219 © 05-2025
964.124.00.0(07)

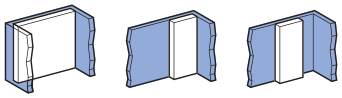

H	B	T
≤ 500	∞	≤ 45
≤ 500	∞	≤ 70
≤ 600	∞	≤ 45 ✓

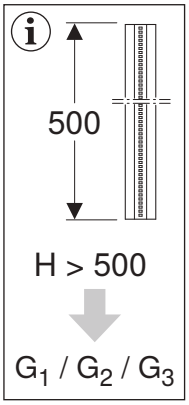

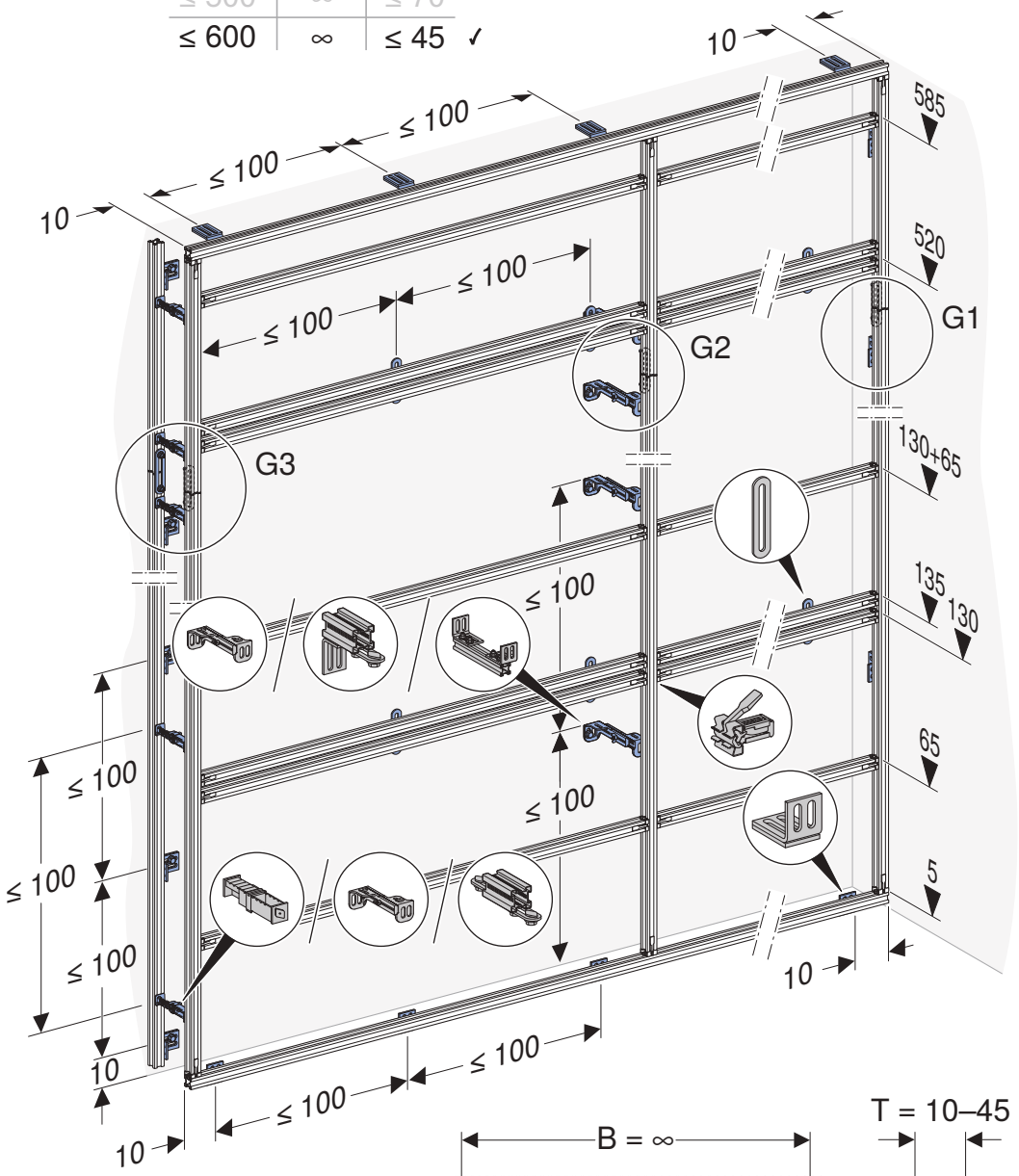

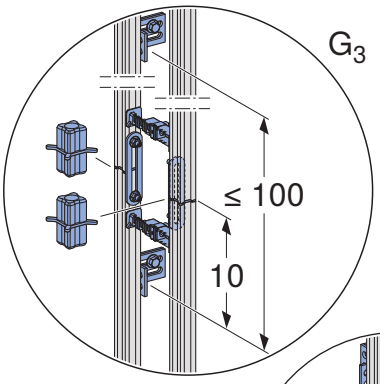

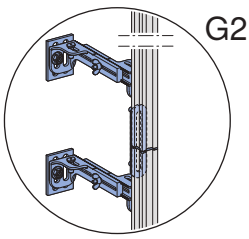

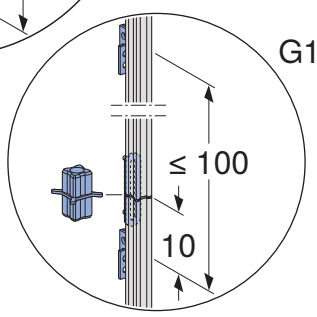

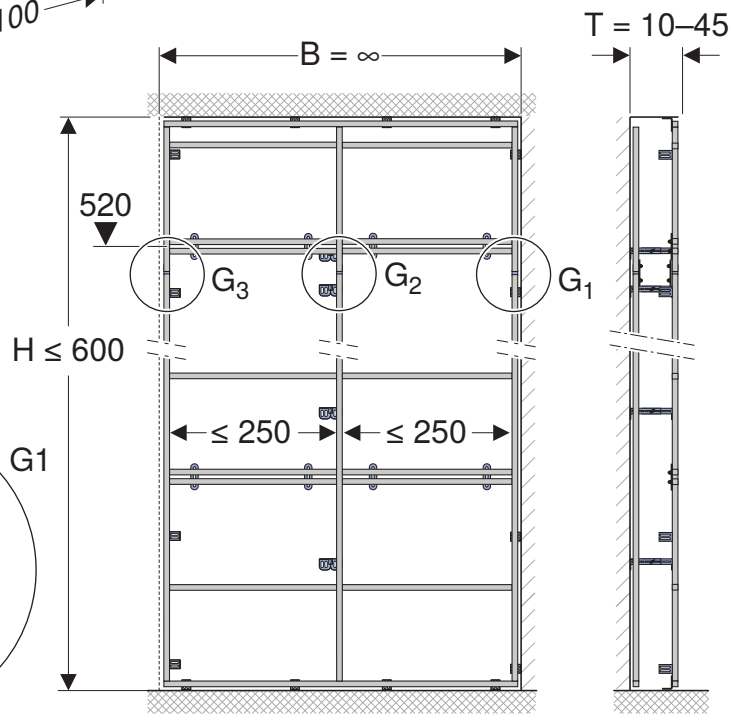

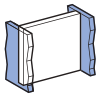

H	B	T	
≤ 360	∞	≤ 45	✓
≤ 450	≤ 360	≤ 45	✓
≤ 360	∞	≤ 70	
≤ 450	≤ 360	≤ 70	
≤ 600	∞	≤ 44	

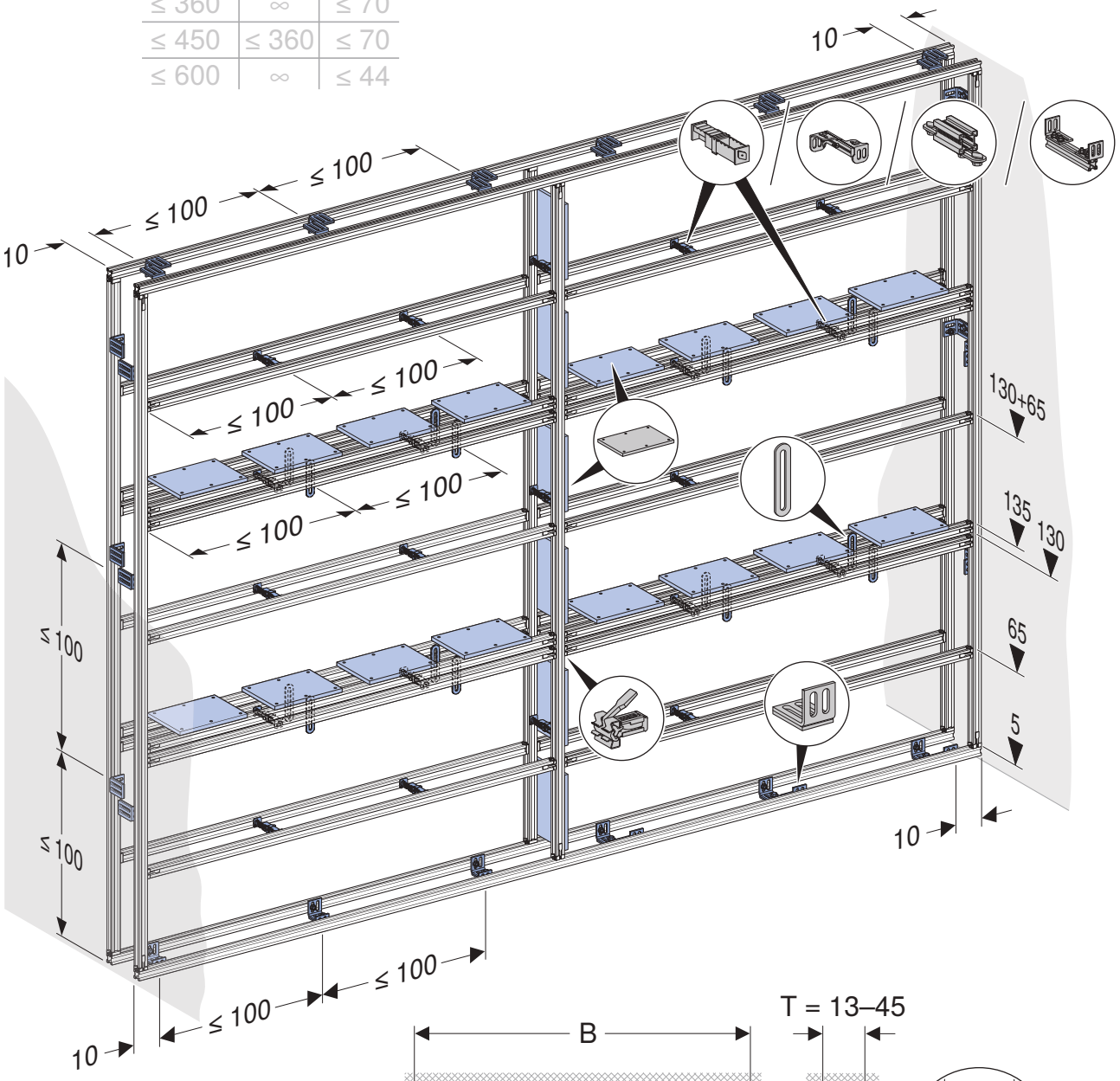

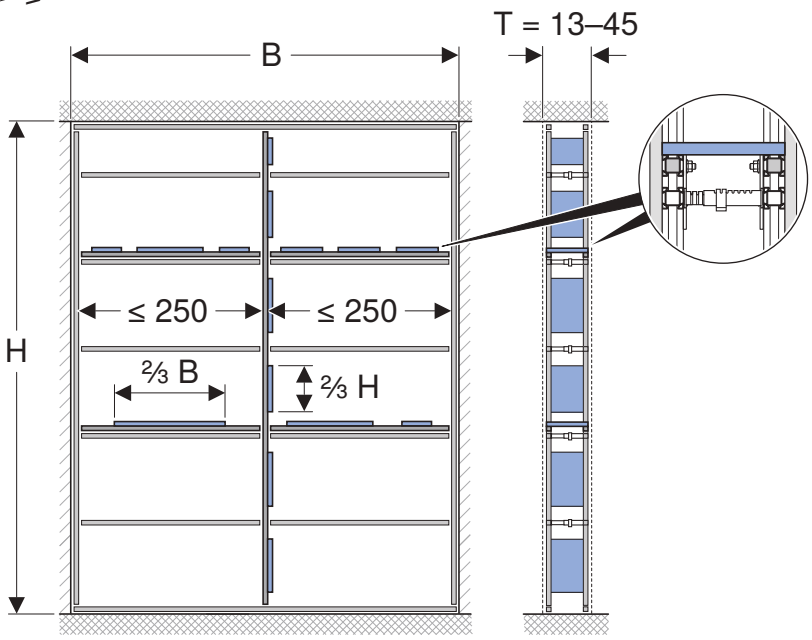

36028805360494219 © 05-2025
964.124.00.0(07)

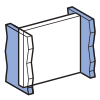

H	B	T	
≤ 360	∞	≤ 45	
≤ 450	≤ 360	≤ 45	
≤ 360	∞	≤ 70	✓
≤ 450	≤ 360	≤ 70	✓
≤ 600	∞	≤ 44	

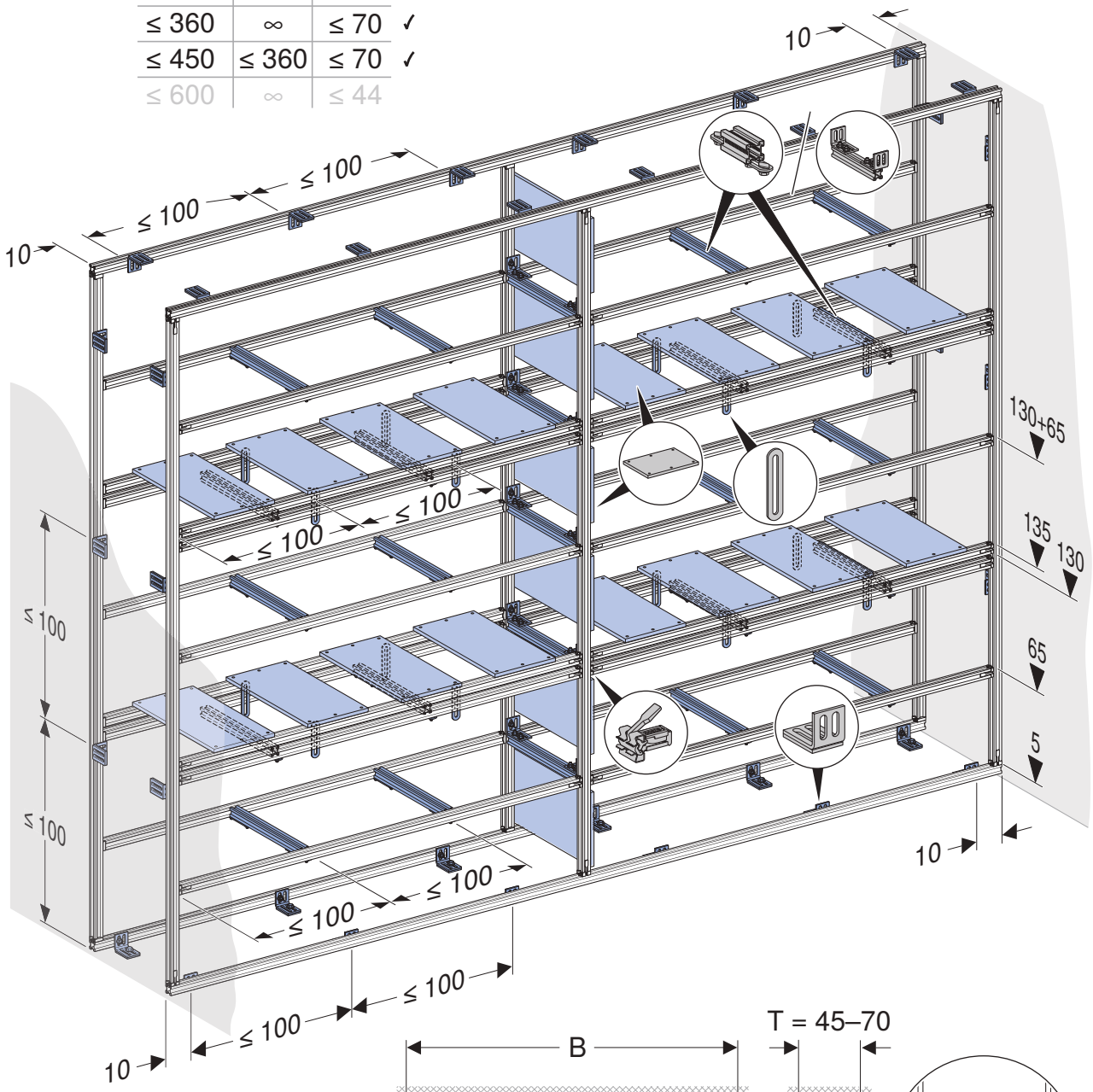

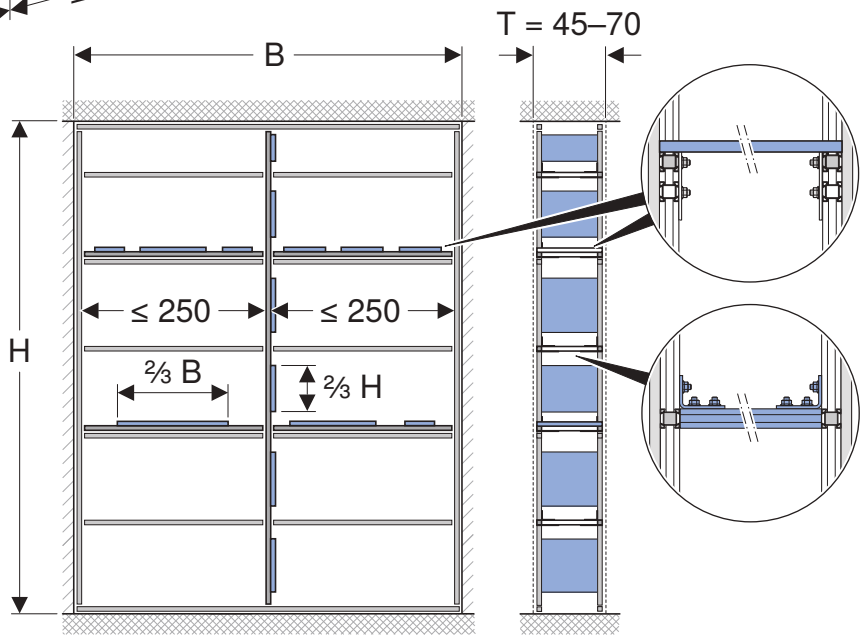

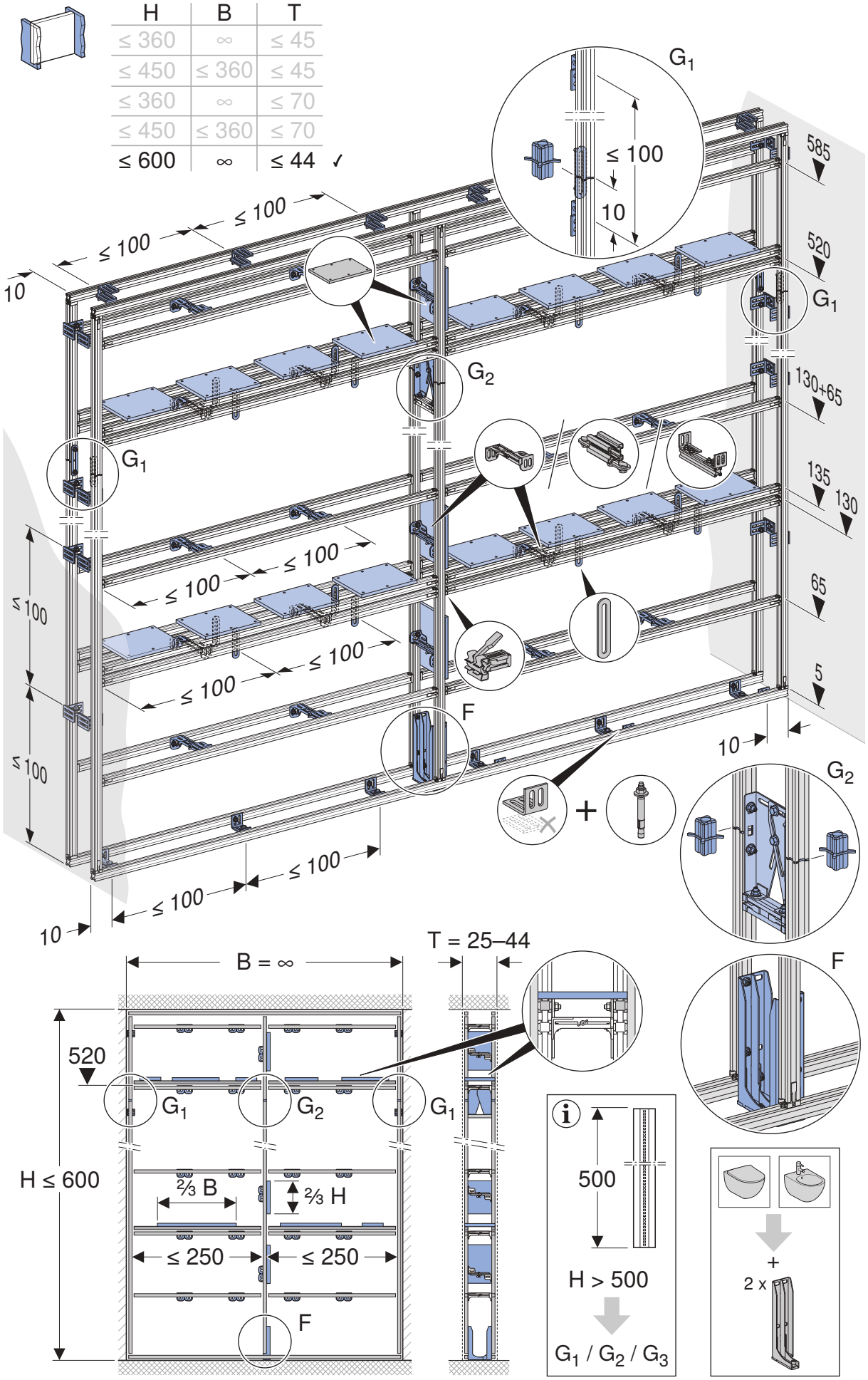

360288053604942l9 © 05-2025
964.124.00.0(07)

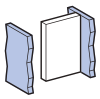

H	B	T	
≤ 360	≤ 250	≤ 44	✓
≤ 360	≤ 250	≤ 60	
≤ 600	≤ 500	≤ 44	

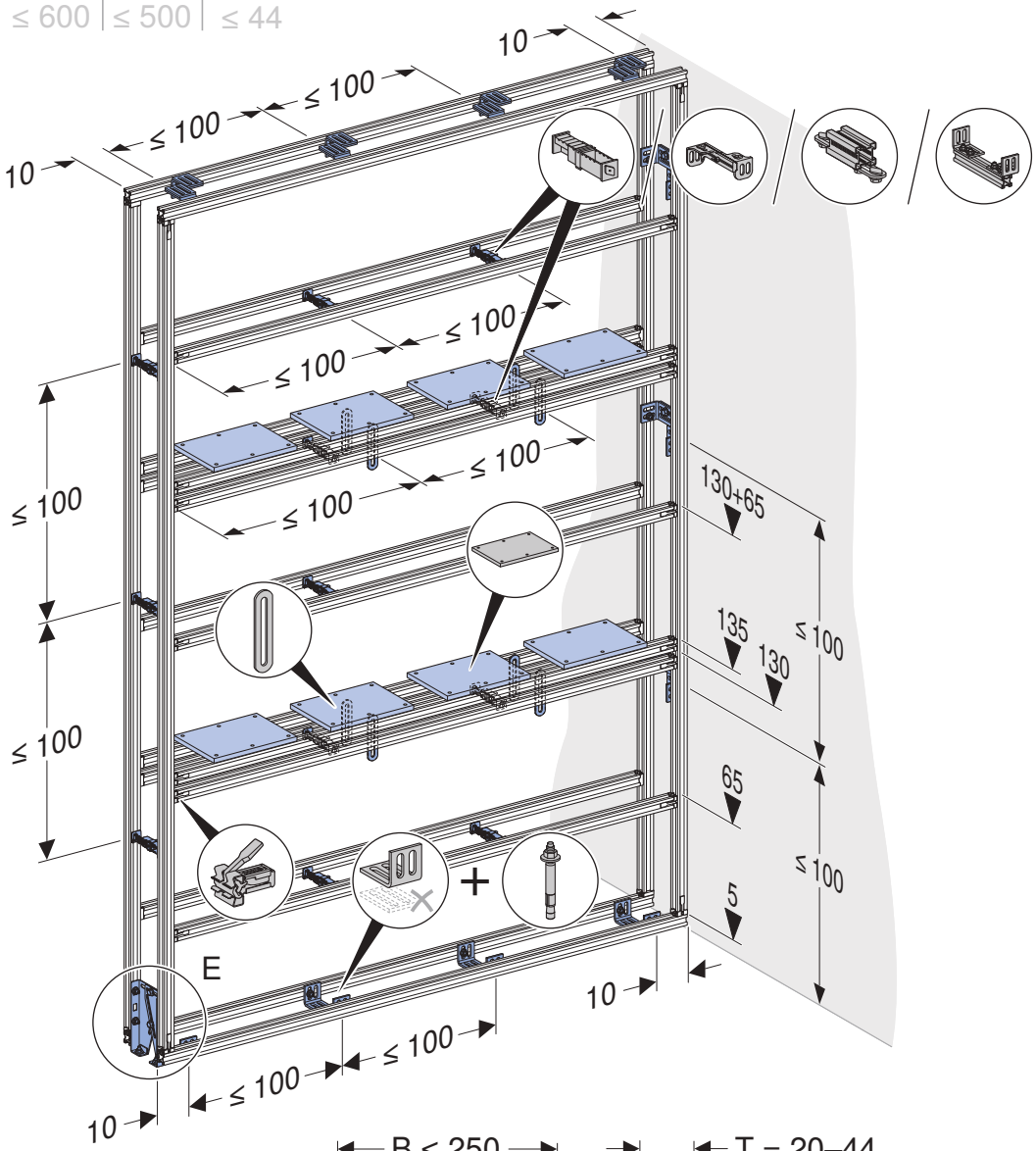

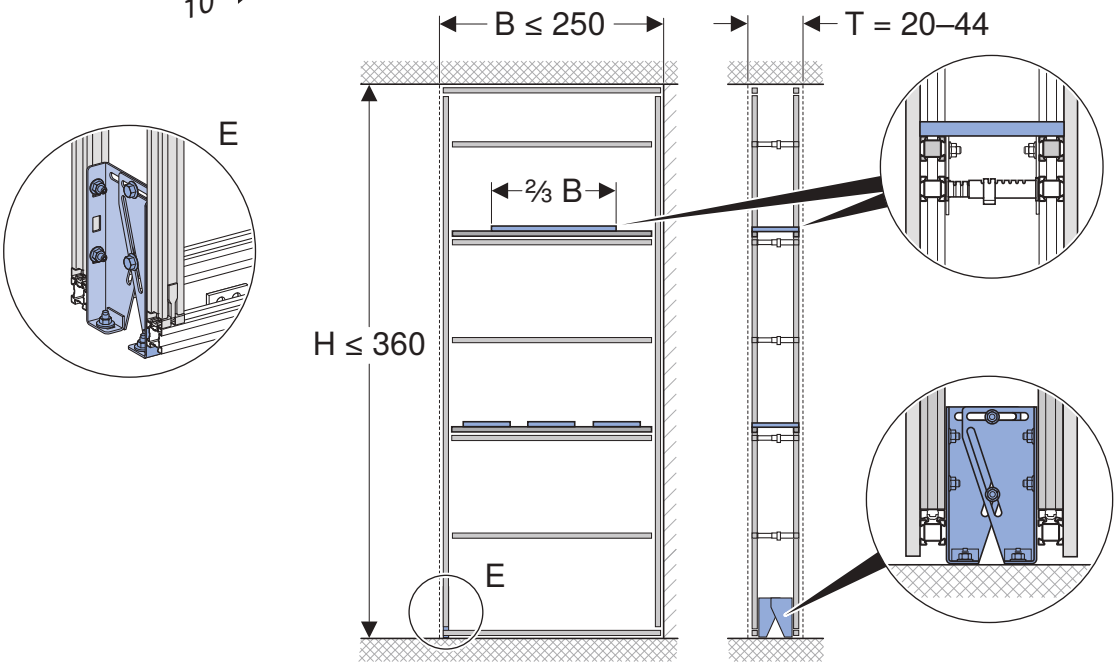

H	B	T	
≤ 360	≤ 250	≤ 44	
≤ 360	≤ 250	≤ 60	✓
≤ 600	≤ 500	≤ 44	

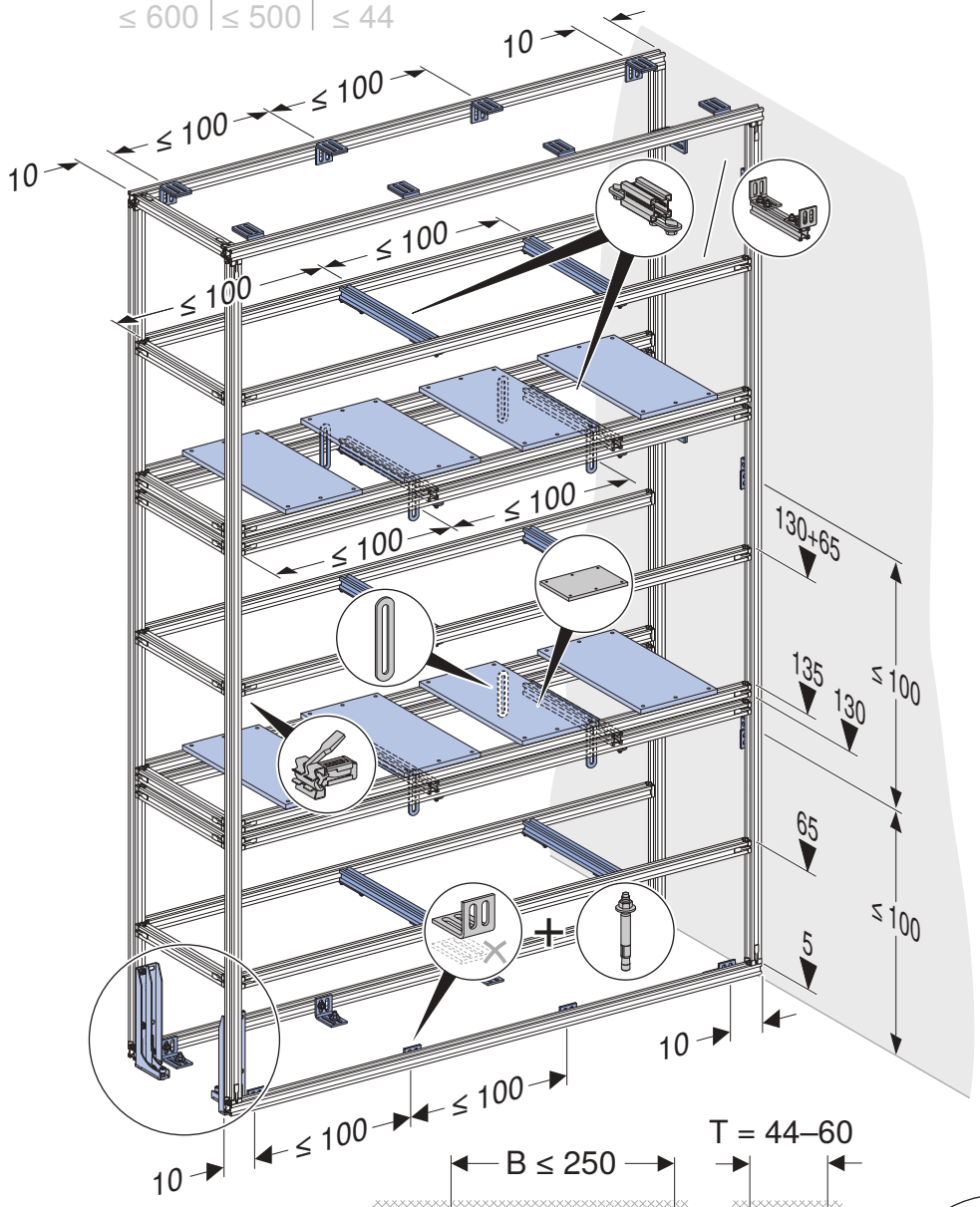

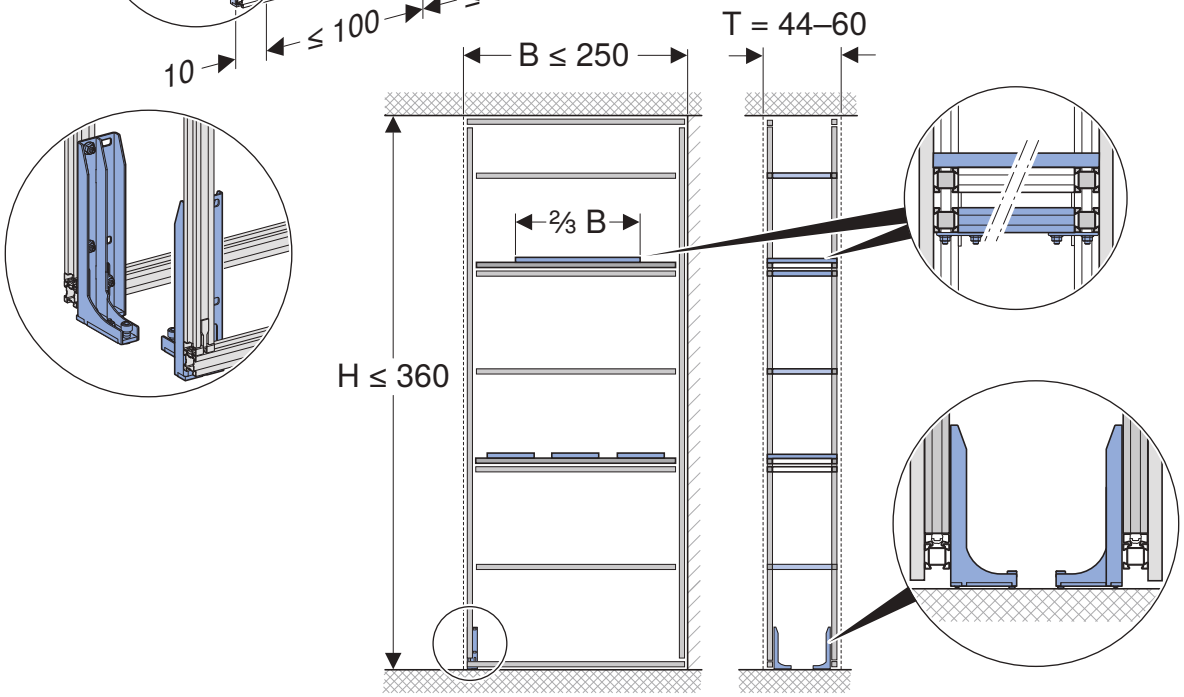

36028805360494219 © 05-2025
964.124.00.0(07)

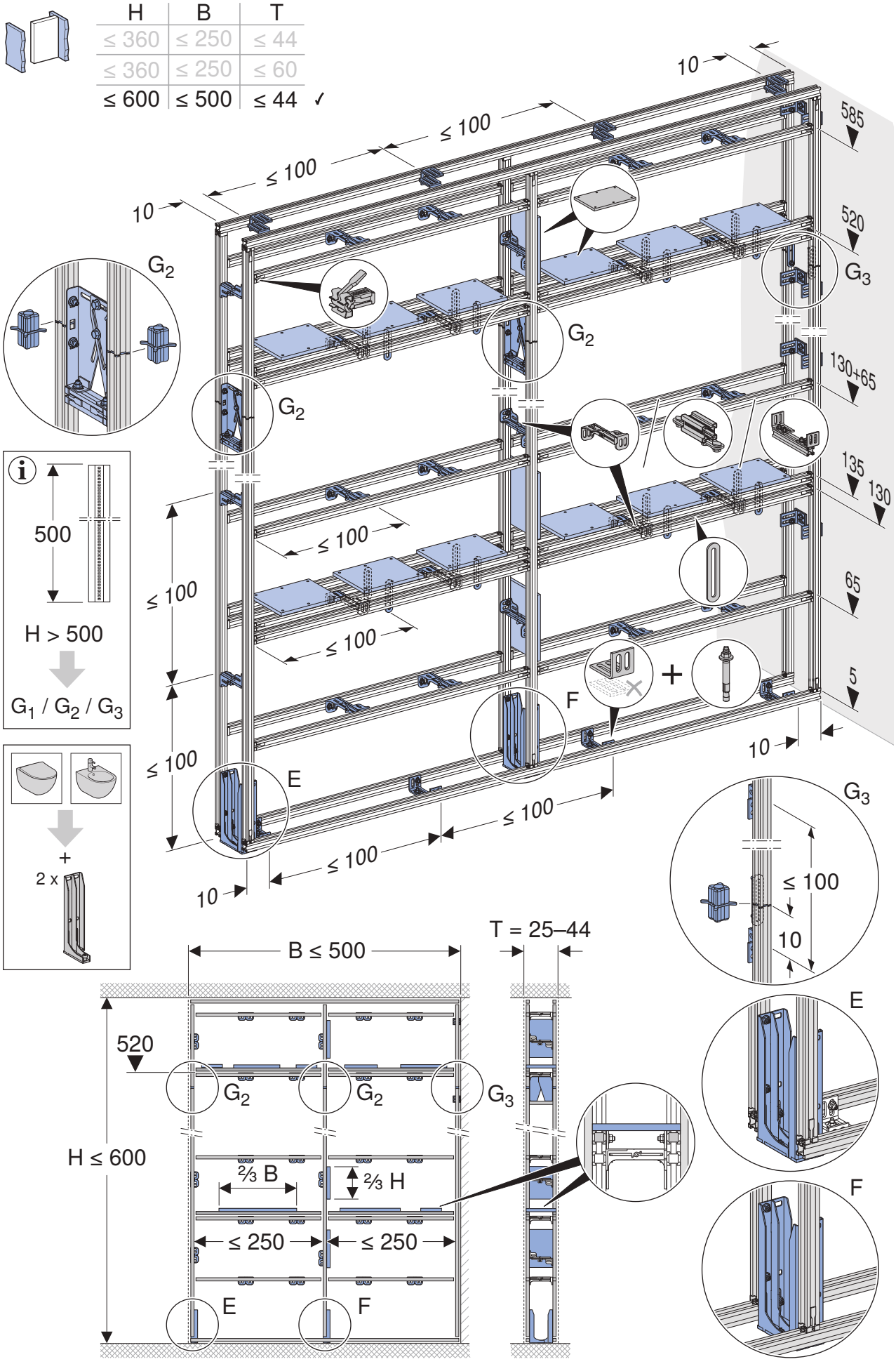
H
B
T
≤ 360
≤ 250
≤ 44
≤ 360
≤ 250
≤ 60
≤ 600
≤ 500
≤ 44 ✓
10
≤ 100
≤ 100
585
520
130+65
135
130
65
5
G2
G3
F
E
500
H > 500
G1 / G2 / G3
2 x
B ≤ 500
T = 25–44
H ≤ 600
520
⅔ B
⅔ H
≤ 250
≤ 250

H	B	T	
≤ 360	≤ 250	≤ 44	✓
≤ 600	≤ 500	≤ 44	

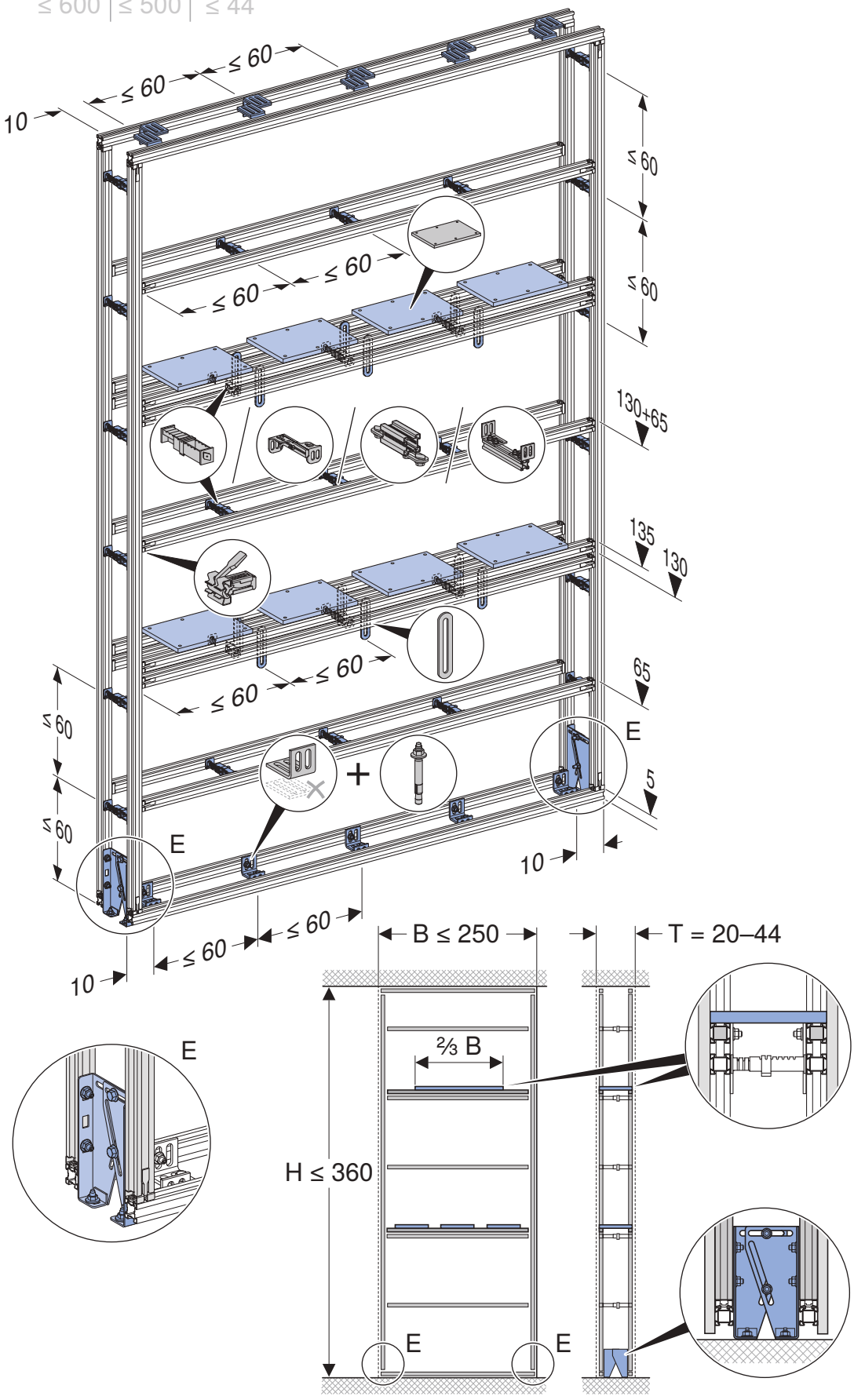

36028805360494219 © 05-2025
964.124.00.0(07)

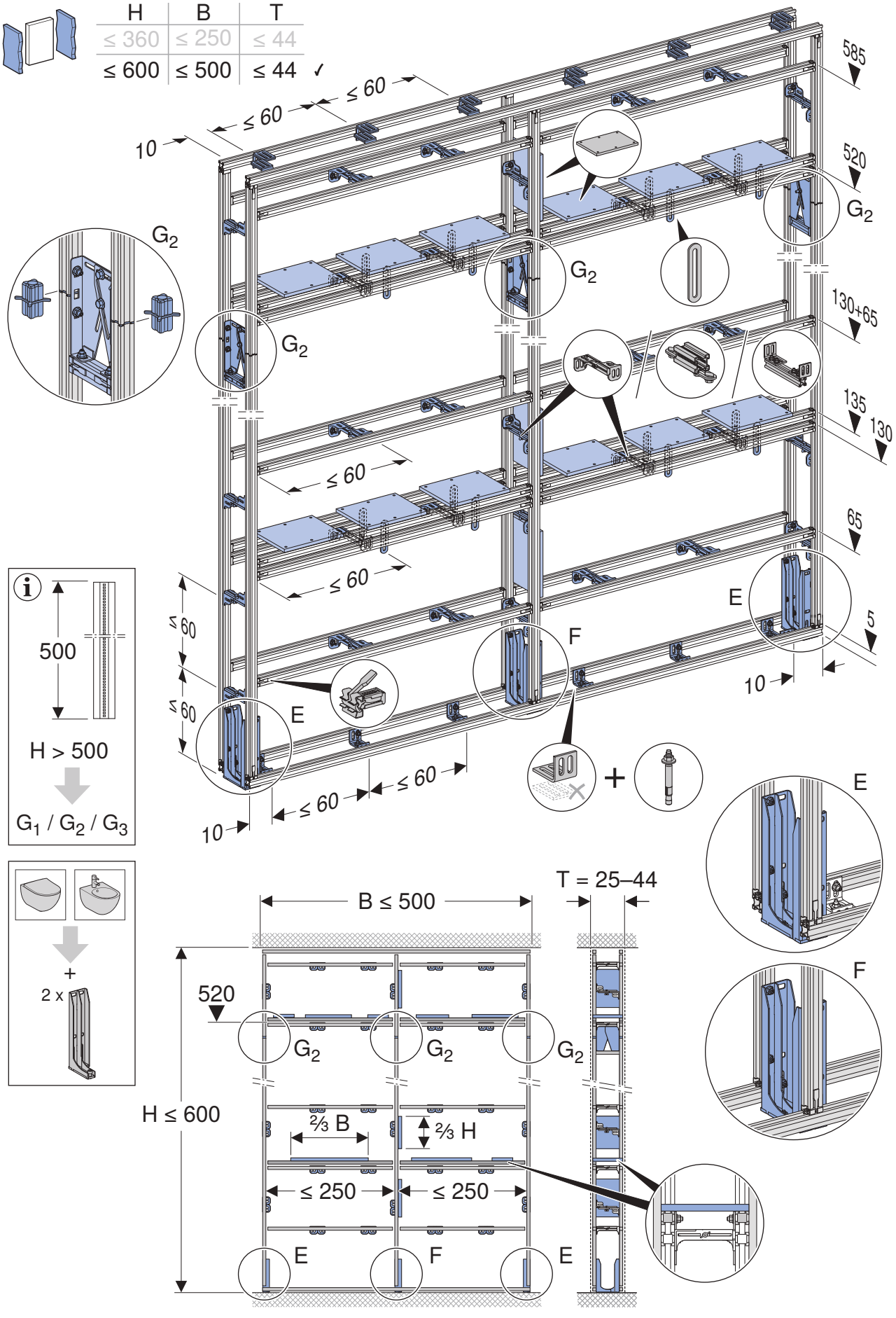
H
B
T
≤ 360
≤ 250
≤ 44
≤ 600
≤ 500
≤ 44 ✓
≤ 60
≤ 60
≤ 60
10
585
520
130+65
135
130
65
5
10
G2
G2
G2
G2
E
F
E
F
E
500
H > 500
G1 / G2 / G3
+
2 x
B ≤ 500
T = 25–44
520
H ≤ 600
⅔ B
⅔ H
≤ 250
≤ 250
G2
G2
G2
E
F
E

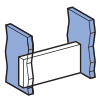

H	B	T	
≤ 360	≤ 250	≤ 45	✓
≤ 600	≤ 500	≤ 44	

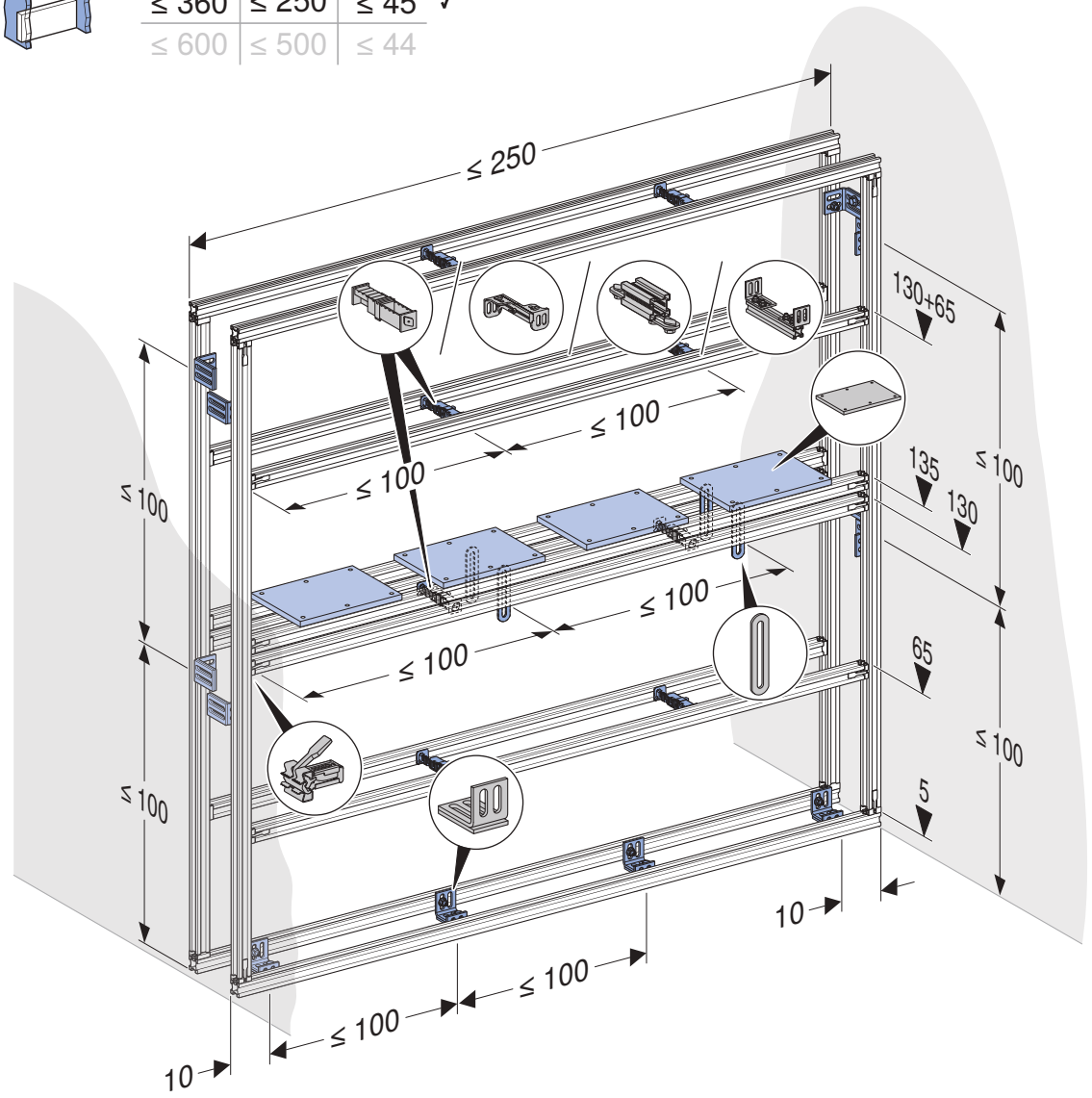

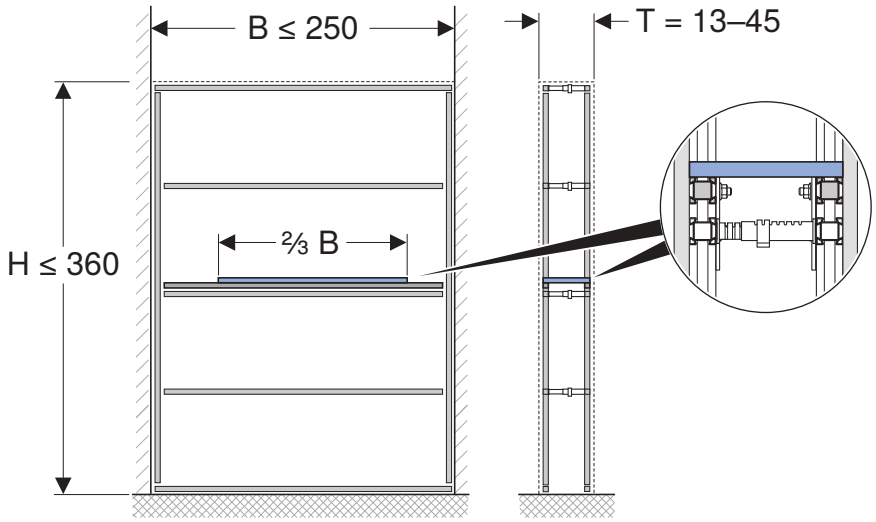

36028805360494219 © 05-2025
964.124.00.0(07)

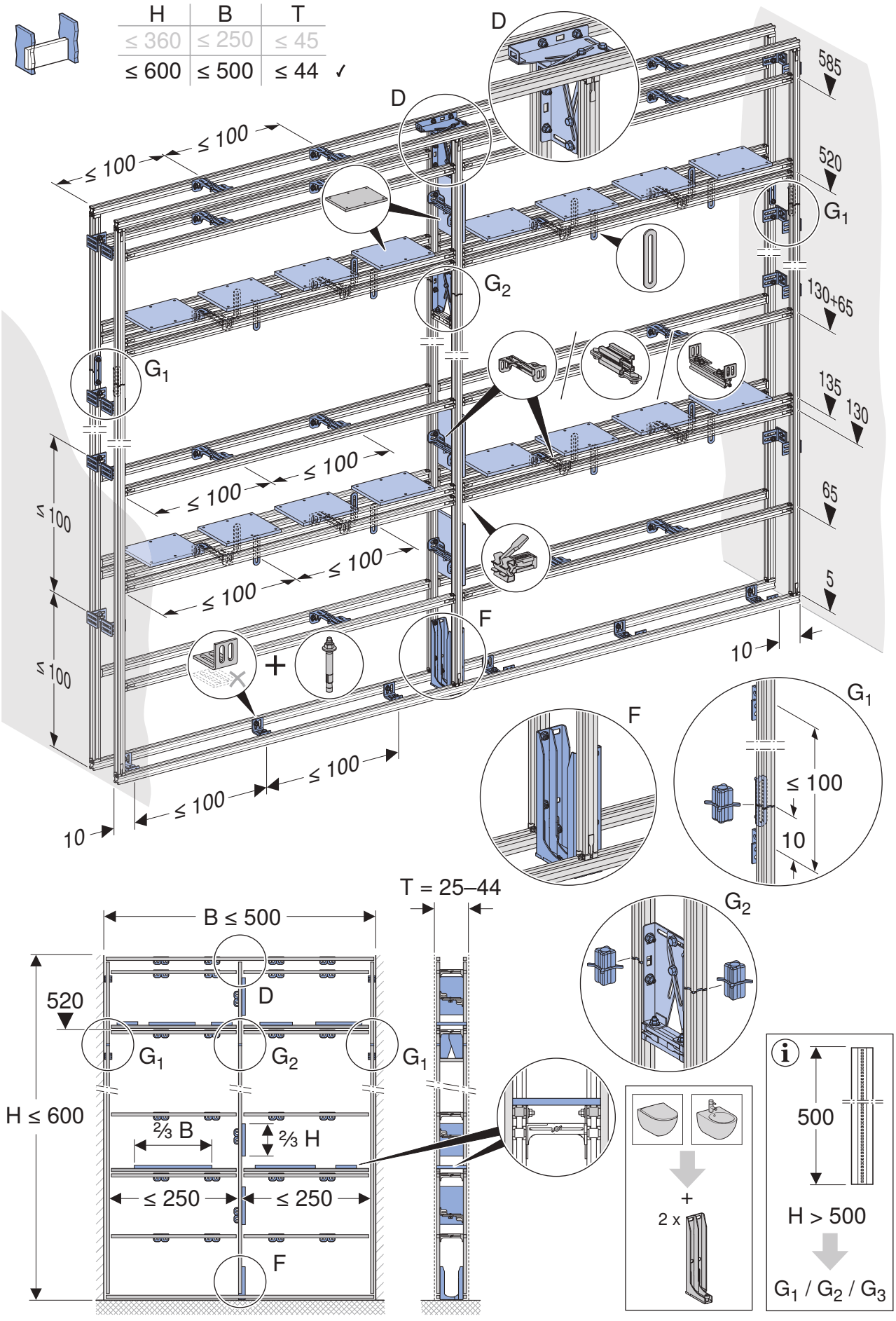
H
B
T
≤ 360
≤ 250
≤ 45
≤ 600
≤ 500
≤ 44 ✓
D
G1
G2
F
≤ 100
585
520
130+65
135
130
65
5
10
T = 25–44
B ≤ 500
H ≤ 600
⅔ B
⅔ H
2 x
500
H > 500
G1 / G2 / G3

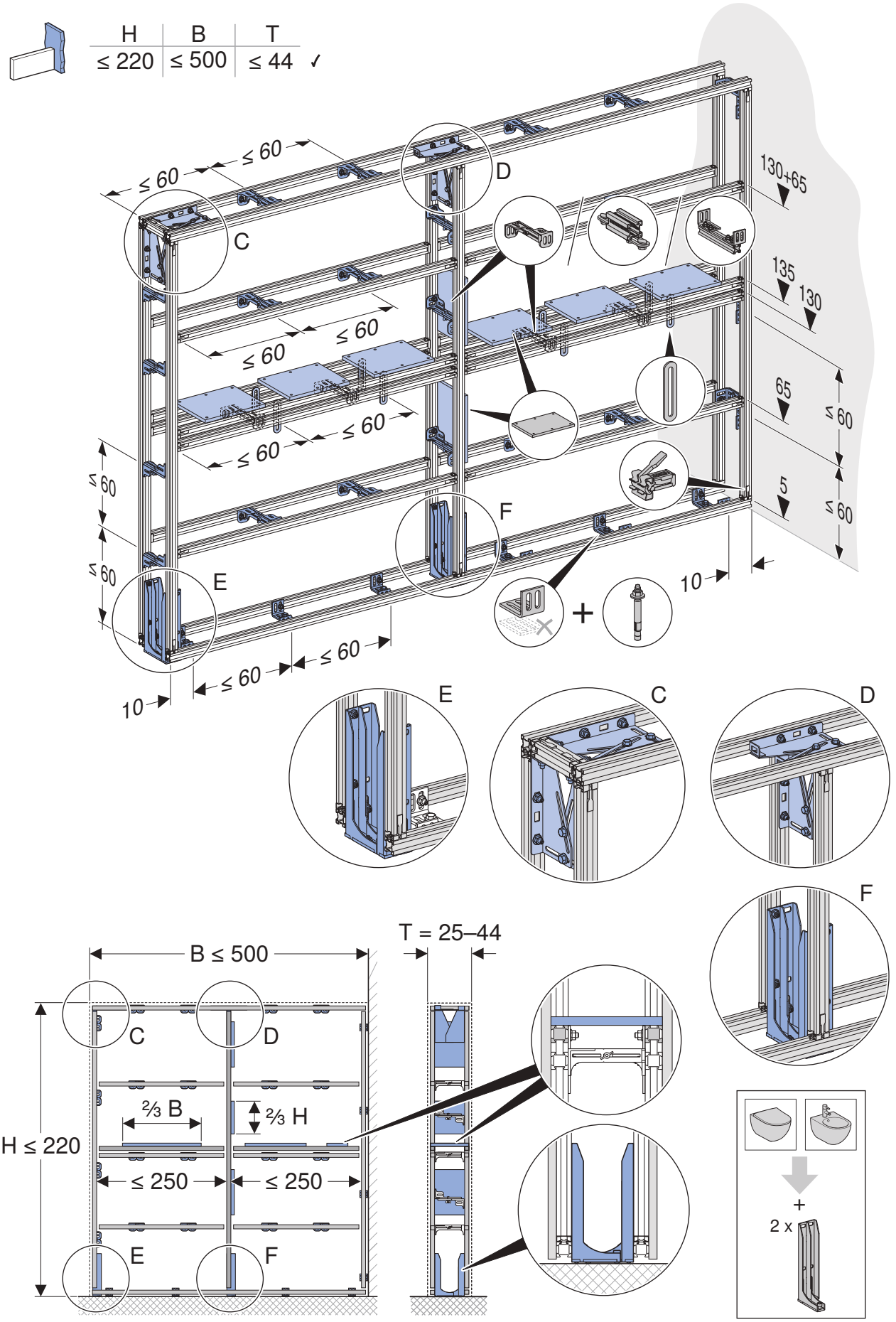

36028805360494219 © 05-2025
964.124.00.0(07)

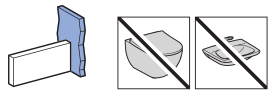

H	B	T	
≤ 200	≤ 100	≤ 45	✓

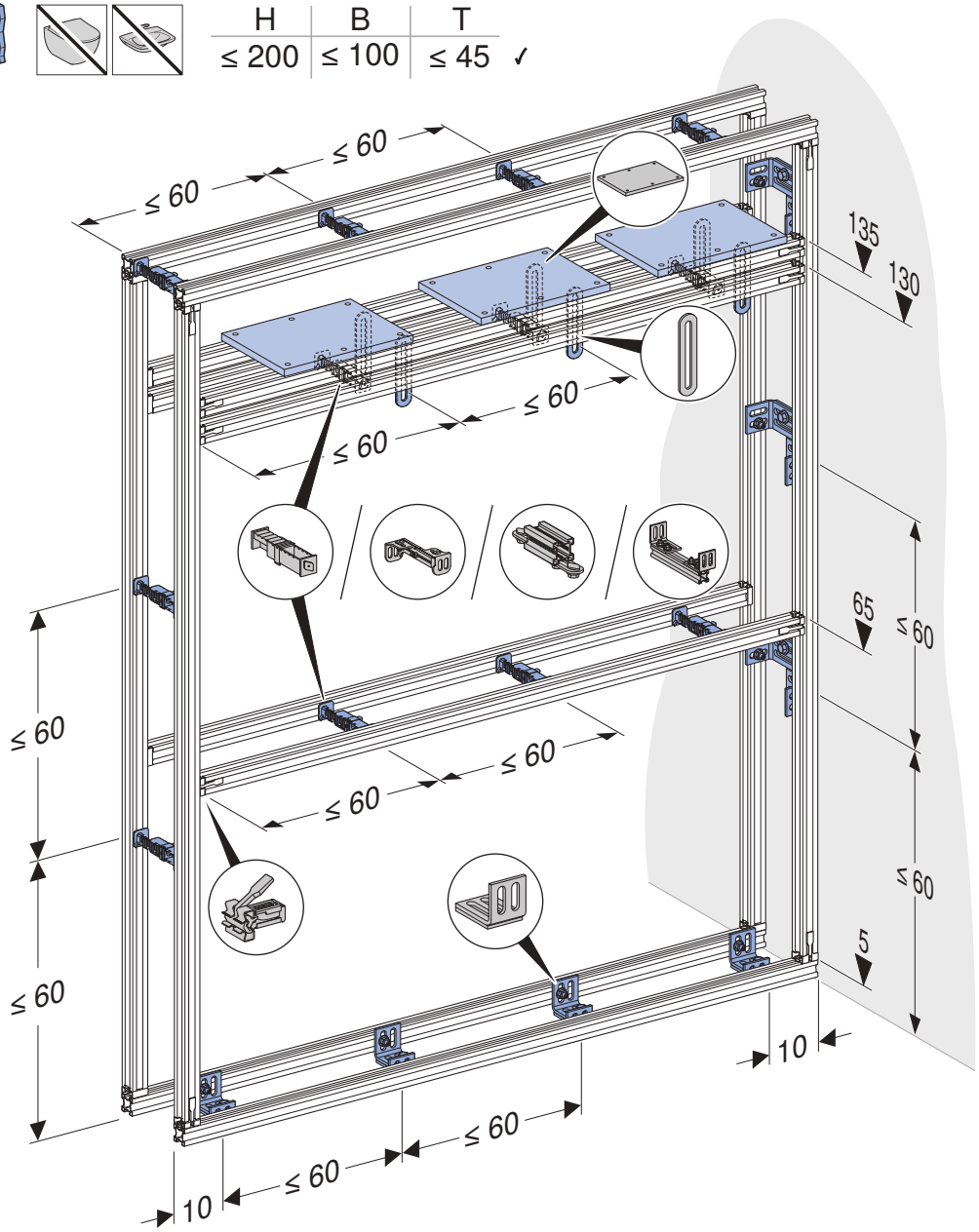

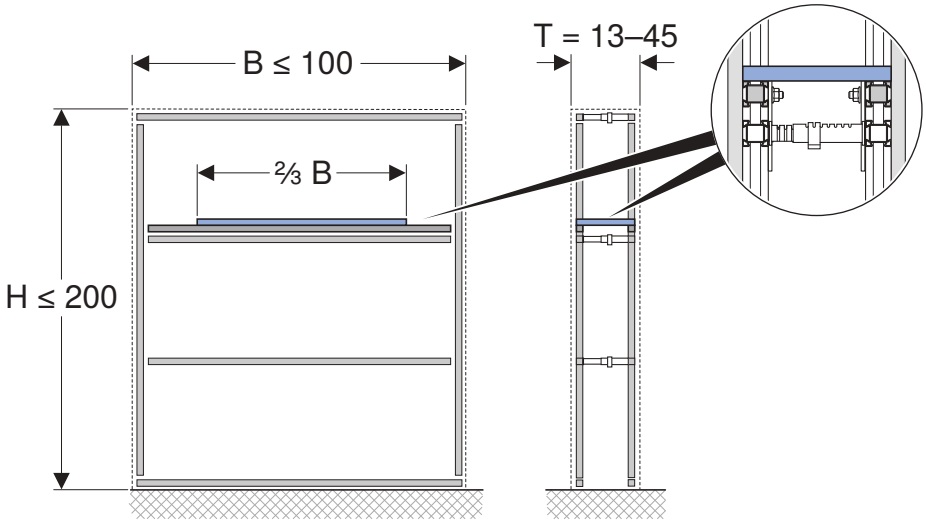

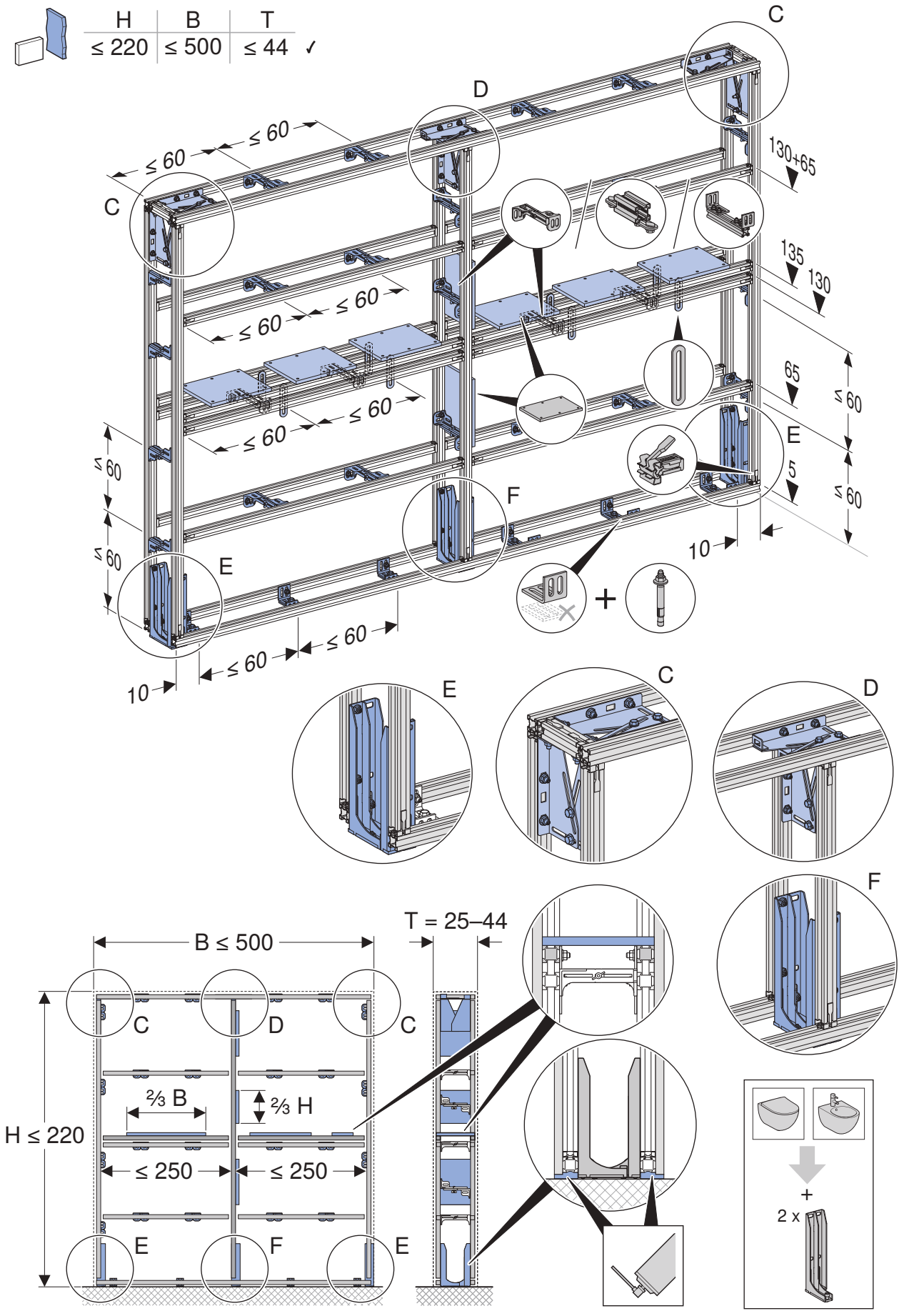

36028805360494219 © 05-2025
964.124.00.0(07)

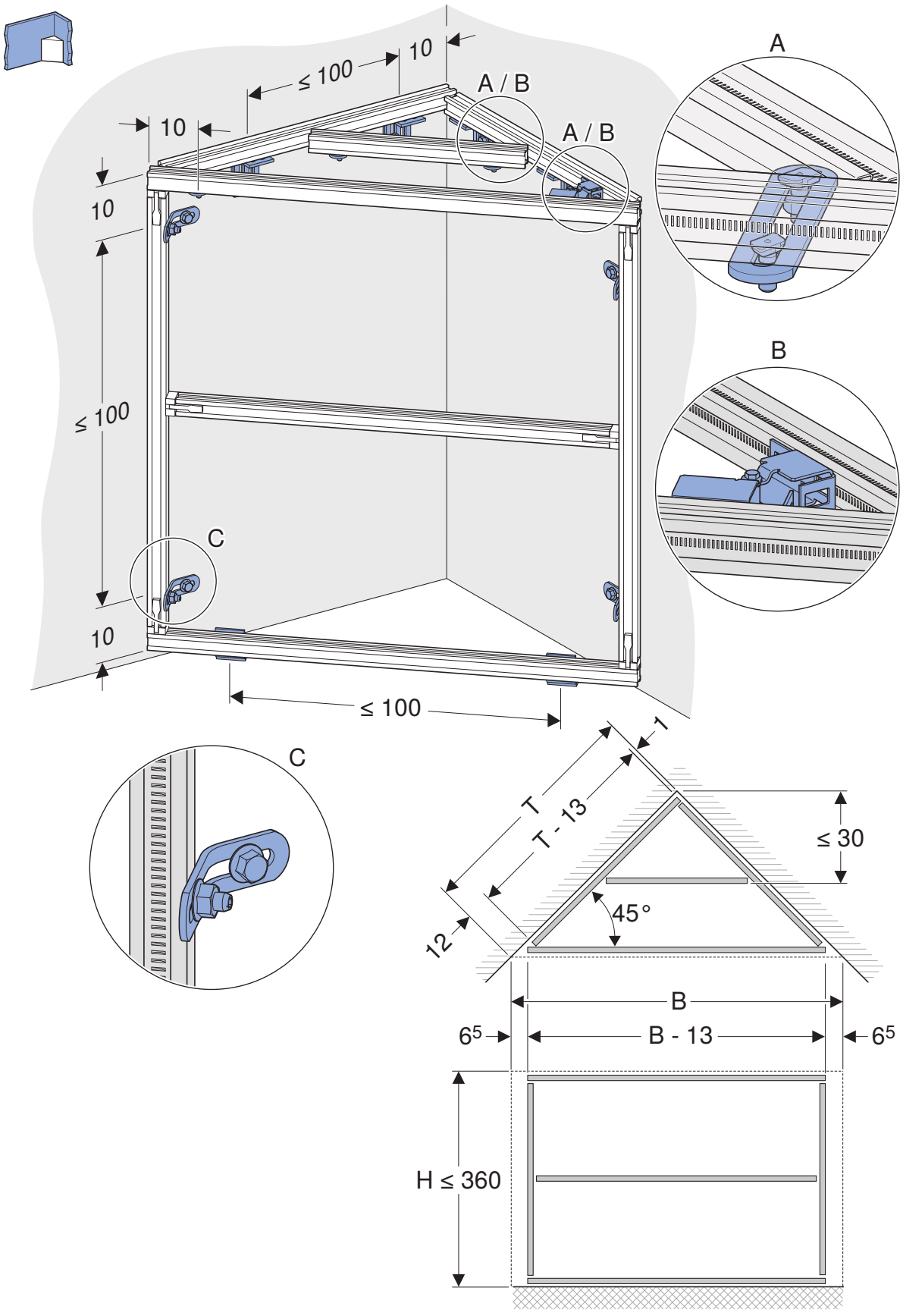
10
≤ 100
10
A / B
A / B
10
≤ 100
10
C
≤ 100
A
B
C
1
T
T - 13
≤ 30
45°
12
B
6⁵
B - 13
6⁵
H ≤ 360

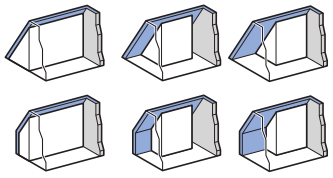

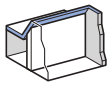

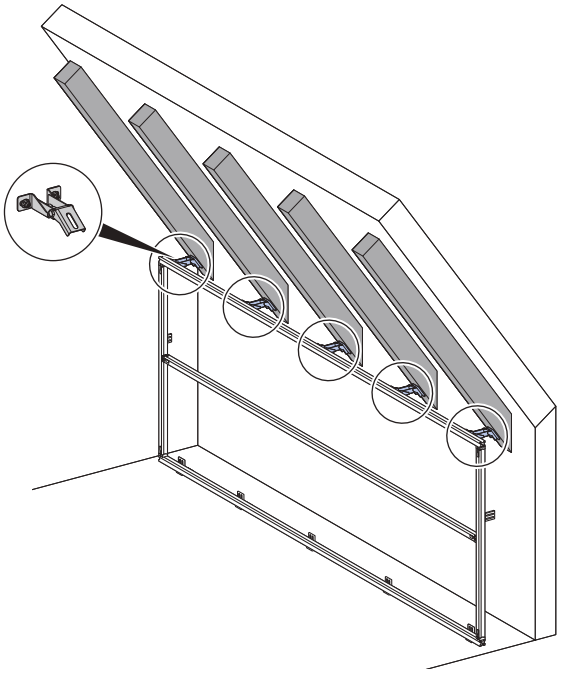

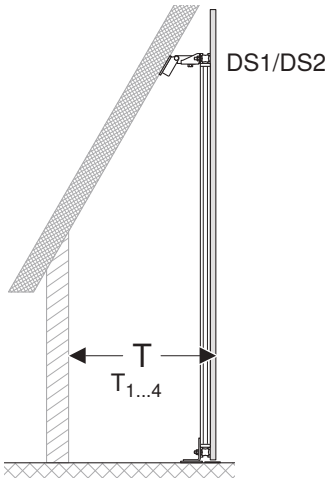

	T_1	T_2	T_3	T_4	T_{DS1}	T_{DS2}
T ≤ 45	19–24	24[5]–36	36[5]–45	19–45	19–45	25–45
T ≤ 125	×	×	×	45–125	45–125	45–125
T ≤ 70 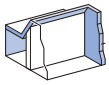	21[5]–24	24[5]–36	36[5]–70	21[5]–70	21[5]–70	×

Installation Manual

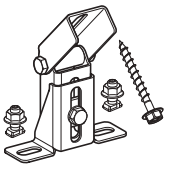

Art.-Nr. 461.191.00.1

36028805360494219 © 05-2025

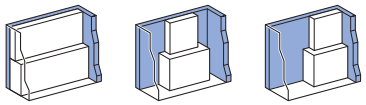

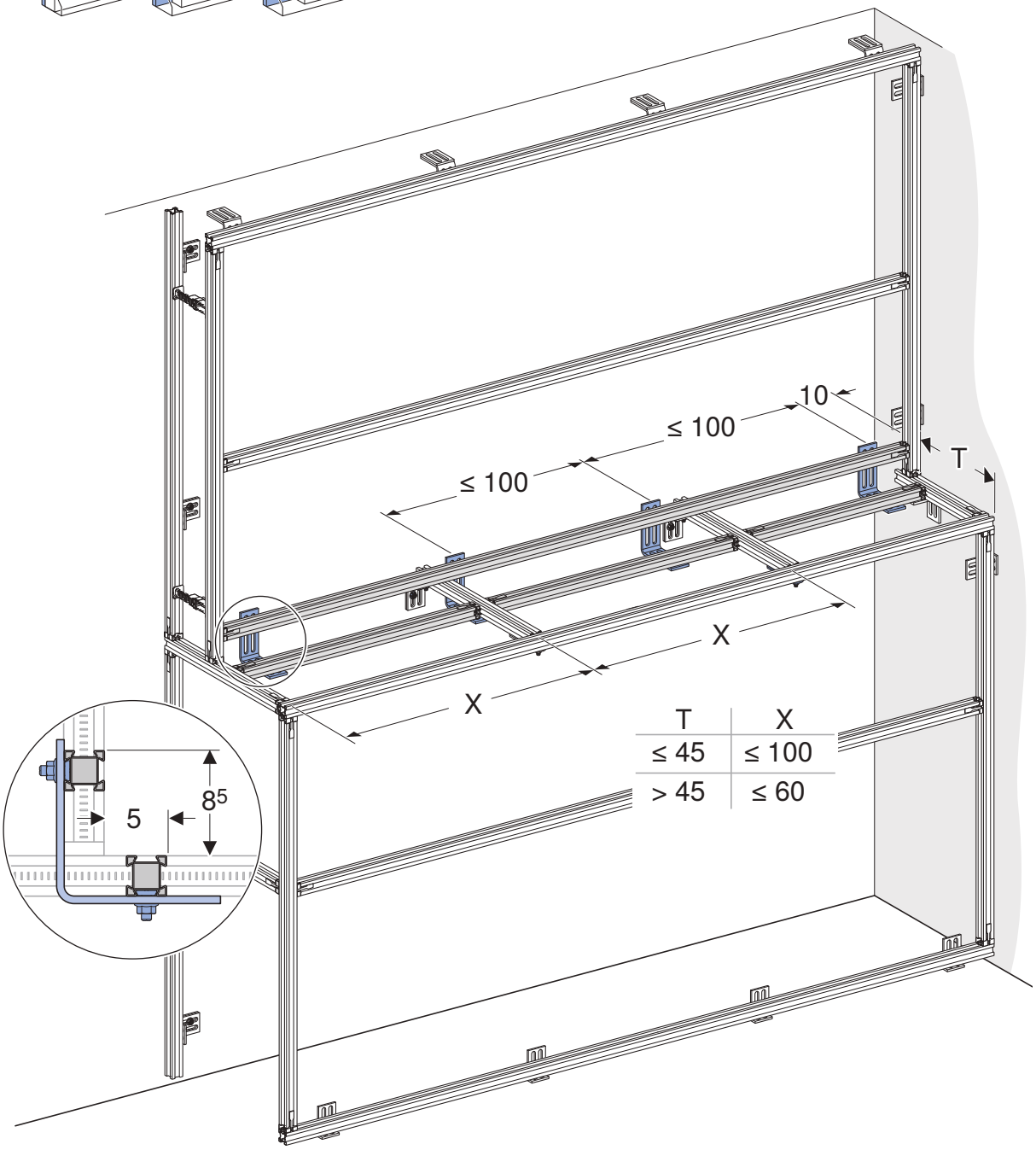

cm

970.386

Installation Manual

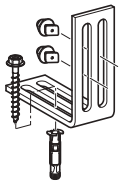

Art.-Nr. 461.185.00.1

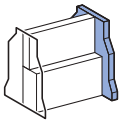

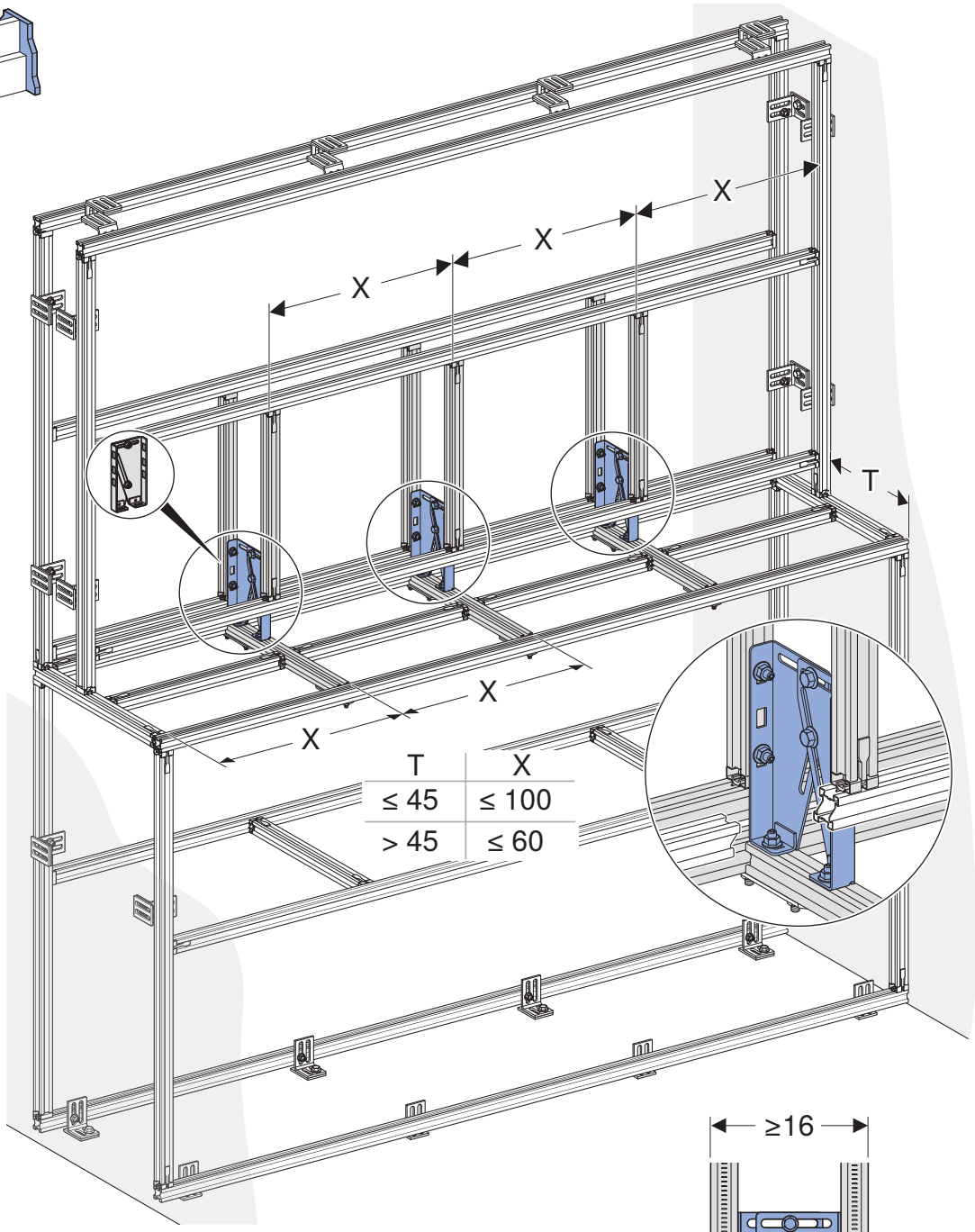

T	X
≤ 45	≤ 100
> 45	≤ 60

Installation Manual

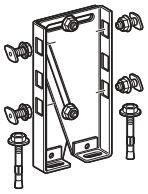

Art.-Nr. 461.660.00.1

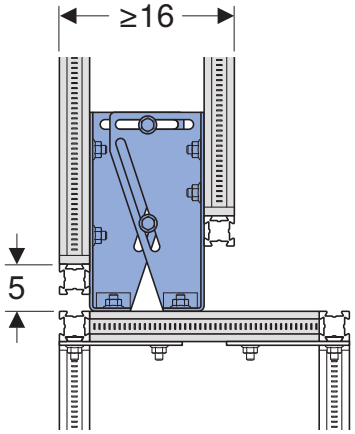

36028805360494219 © 05-2025
964.124.00.0(07)

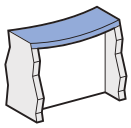

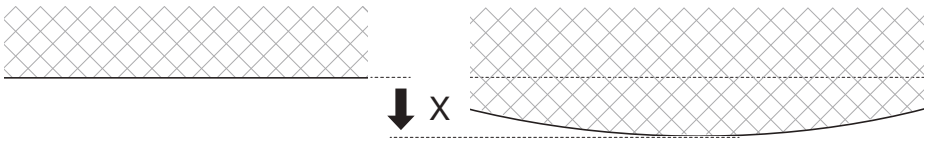

X [mm]

0–5 (Standard Installation)

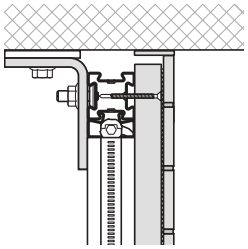

✓ ✓ ✓

5–10

(30x)

Technical Data Sheet

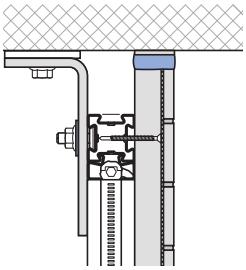

✓ ✓ ✗

10–25

(30x)

Technical Data Sheet

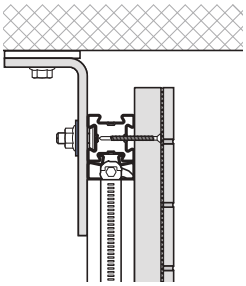

✓ ✗ ✗

5–25

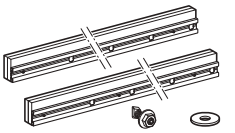

(6x) (12x)

Installation Manual

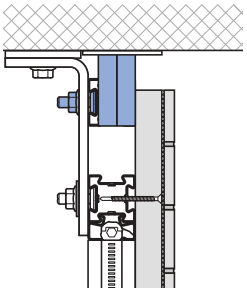

✓ ✓ ✓

36028805360494219 © 05-2025
964.124.00.0(07)

Geberit International AG
Schachenstrasse 77, CH-8645 Jona
documentation@geberit.com
www.geberit.com

360288053604942l9 © 05-2025
964.124.00.0(07)